OSSTEM IMPLANT

US SYSTEM CATALOG

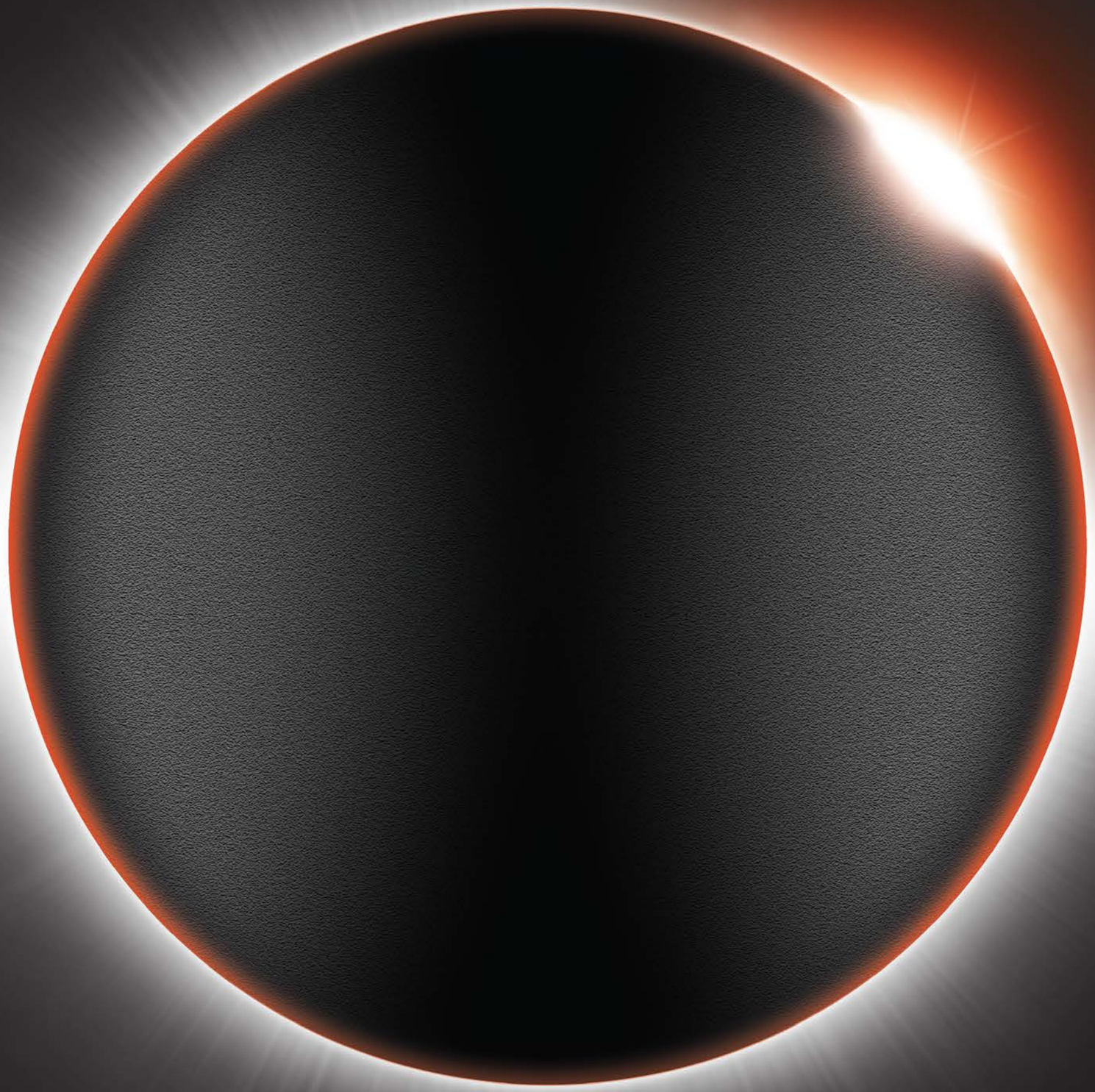

CE 2460

PG И М22

OSSTEM IMPLANT

US SYSTEM CATALOG

Osstem Implant
2018-19 Comprehensive Catalog

Overall Planning/Editing PR Department Design Team
Supervision Implant Lab, Marketing PM
Production/Distribution Marketing & Planning Team
Date of Publication 2018.08
Publisher Osstem Implant
8th FL, World Meridian II, 123, Gasan digital 2-ro,
Geumcheon-gu, Seoul, Korea
Phone +82.2.2016.7000
Fax +82.2.2016.7001
www.osstem.com

2018 Printed in Seoul, Korea

003 INTRODUCTION
012 CONTENTS
016 US SYSTEM
072 USER MANUAL

CEO's Message

Providing cutting edge technology and superior quality

Making products that dentists want to use, trust, and are satisfied with :
This is our mission at OSSEM IMPLANT

We are forever grateful to all the dentists who have given unwavering support to OSSTEM IMPLANT

Thank you for using Osstem Implant. Osstem, Korea's first implant manufacturer, has secured world-class implant competitiveness through continuous R&D investment and quality innovation.
It has grown to become Asia-Pacific No.1 and World No.5 Implant Company. In addition to dental implants and treatment tools, we are leading the development of products that are essential for dentists, including dental equipment, dental materials, and dental IT, and contribute to the development of the dental industry.
The comprehensive catalog of the 2018-19 product series published here shows Osstem's technology-rich products.
We have focused on catalog structure so that it is convenient to browse and order products. In particular, in the case of fixtures, abutments, and surgical tools, we introduced the diameter, length, and functions in detail.

GBR products are also easy to order by type, size and capacity.
In addition, the product release date and time are displayed so that customers can understand when the existing product is released and what the newly released product is. We also introduced the CAD/CAM product in terms of preparing the digital dentistry, a major trend in the dentistry. In terms of design, we also implemented high-quality images of representative products by specification. By applying representative colors for each product system, it is easy to sort by category. We hope this will help you effectively find and purchase the products you need from the dental clinic of 2018-19. Osstem Implant will continue to develop products that the dentist can trust. We will work to create greater customer value. Thank you.

CEO of OSSTEM IMPLANT
Choi Kyu-ok (DDS.Ph.D)

Worldwide & History

EMEA

Germany, United Kingdom, France, Italy, Sweden, Denmark, Finland, Norway, Poland, Hungary, Spain, Portugal, Bulgaria, Romania, Serbia, Slovakia, Croatia, Czech, Estonia, Greece, Latvia, Lithuania, Albania, Malta, Ukraine, Tunisia, Sudan, Egypt, Iran, Iraq, Jordan, Kuwait, Lebanon, Syria, Pakistan, Saudi Arabia, UAE, Kyrgyzstan

ASIA / OCEANIA

China, South China, Hong Kong, Taiwan, Japan, India, Russia, Kazakhstan, Thailand, Singapore, Malaysia, Indonesia, Vietnam, Philippines, Bangladesh, Cambodia, Sri Lanka, Myanmar, Mongolia, Australia, Papua New Guinea

N/S.AMERICA

USA, Canada, Mexico, Chile, Colombia, Peru, Costa Rica

1997

01 Established 'Osstem Co., Ltd.'
12 Released 'Doobunae' (health insurance claim application software program)

2000

06 Released 'Hanaro' (dentistry management software)
10 Acquired sumin comprehensive dental materials

2001

01 Obtained CE-0434 certification
03 Established AIC training center

2002

01 Established Osstem Implant R&D center
08 Obtained FDA certification, launched USII line
10 Launched SSII line

2006

03 Changed the company name to Osstem Implant Co., Ltd
04 Obtained GOST-R certification (russia)
12 Established 12 overseas branches (first round)

2007

02 Listed on KOSDAQ and began trading publicly
06 Selected as No.1 products for the next generation and obtained TGA certification (australia)

2008

01 Established osstem bone science research center
12 Selected as a managing organization for the national strategic technology development project

2009

10 Obtained approval for medical device manufacturing and sale from the ministry of health, labor and welfare, japan

2010

03 Launched TSIII SA line
06 Launched TSIII HA line

2011

06 Osstem Implant R&D center was selected as ATC (advanced technology center)
07 Selected as 'World Champ' business
12 Launched 'K2 unit chair', which was selected as a 'World Class Product'

2012

06 Launched TSIII CA line
07 Established osstem dental equipment research institute

2013

01 Launched osstem xenograft material 'A-Oss'
09 Launched 'K3 unit chair'
10 Selected as a 'Hidden Champion' company

2014

05 Selected as 'World Class 300'
05 Released 'HyFlex', an impression material
08 Released 'BeauTis' whitening material

2015

03 Established Osstem BioPharma Co., Ltd.
12 Awarded 'USD 50 Million Export Tower'

2016

01 Established Vussen Co., Ltd.
03 Acquired Cardiotec Co., Ltd.
08 Acquired Hubit Co., Ltd.
11 Launched OneGuide system

2017

12 2017 presidential commendation for job creation

2018

01 TS exceeded 10 million production

OSSTEM Implant Design feature

OSSTEM IMPLANT has revolutionized implant dentistry in South Korea. With a focus on aggressive R&D, a commitment to education and a dedication to manufacturing the best products, Osstem Implant's ultimate goal is to become the global leader in implant dentistry.

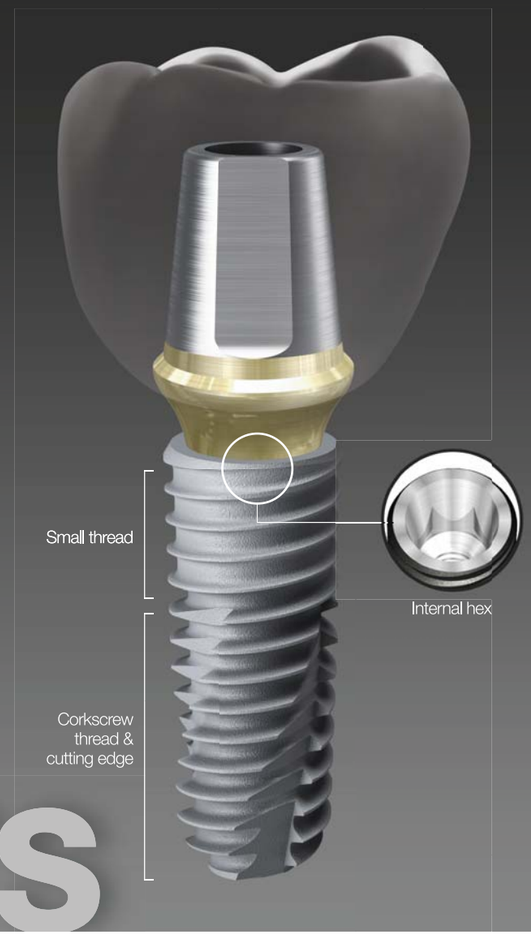

Each implant system has its own unique color code

Submerged type implant with an internal hex and 11˚tapered connection

- Internal connection type - Mini / Regular
- Excellent initial stability in soft bone due to smaller threads in the upper section
- Corkscrew thread with cutting edges
  - Strong self-threading effect for easy fixture path
  - Higher initial stability and consistent insertion torque
- Different body types to properly match the patient's bone quality and clinical condition
  - TSII (straight body) : easy to adjust depth
  - TSIII (1.5˚ tapered body) : excellent initial stability necessary for immediate loading, even in soft bone
  - TSIV (6˚ tapered body) : specifically designed for the maxillary sinus and soft bone, excellent initial stability
- Available surface types - SA / CA / HA / BA / SOI

Non-submerged type implant with an internal octa and 8˚tapered connection

- Internal connection type - Regular / Wide
- Corkscrew thread with cutting edges
  - Strong self-threading effect for easy fixture path
  - Higher initial stability and consistent insertion torque
- Different body types to properly match the patient's bone quality and clinical condition
  - SSII (straight body) : easy to adjust the insertion depth
  - SSIII (1.5˚ tapered body) : excellent initial stability necessary for immediate loading, even in soft bone
- Available surface types - SA / CA / HA / BA

Submerged type implant with an external hex connection structure

- Internal connection type - Mini / Regular / Wide / Wide PS
- Corkscrew thread with cutting edges
  - Strong self-threading effect for easy fixture path
  - Higher initial stability and consistent insertion torque
- Different body types to properly match the patient's bone quality and clinical condition
  - USII (straight body) : easy to adjust the insertion depth
  - USIII (1.5˚ tapered body) : excellent initial stability necessary for immediate loading, even in soft bone
  - USIV (6˚ tapered body) : specifically designed for the maxillary sinus and soft bone, excellent initial stability
- Available surface types - SA / CA

OSSTEM Implant Surface feature

The key factor in providing implant treatment safely
and efficiently is surface technology.
OSSTEM IMPLANT is proud of
its cutting-edge surface technology.

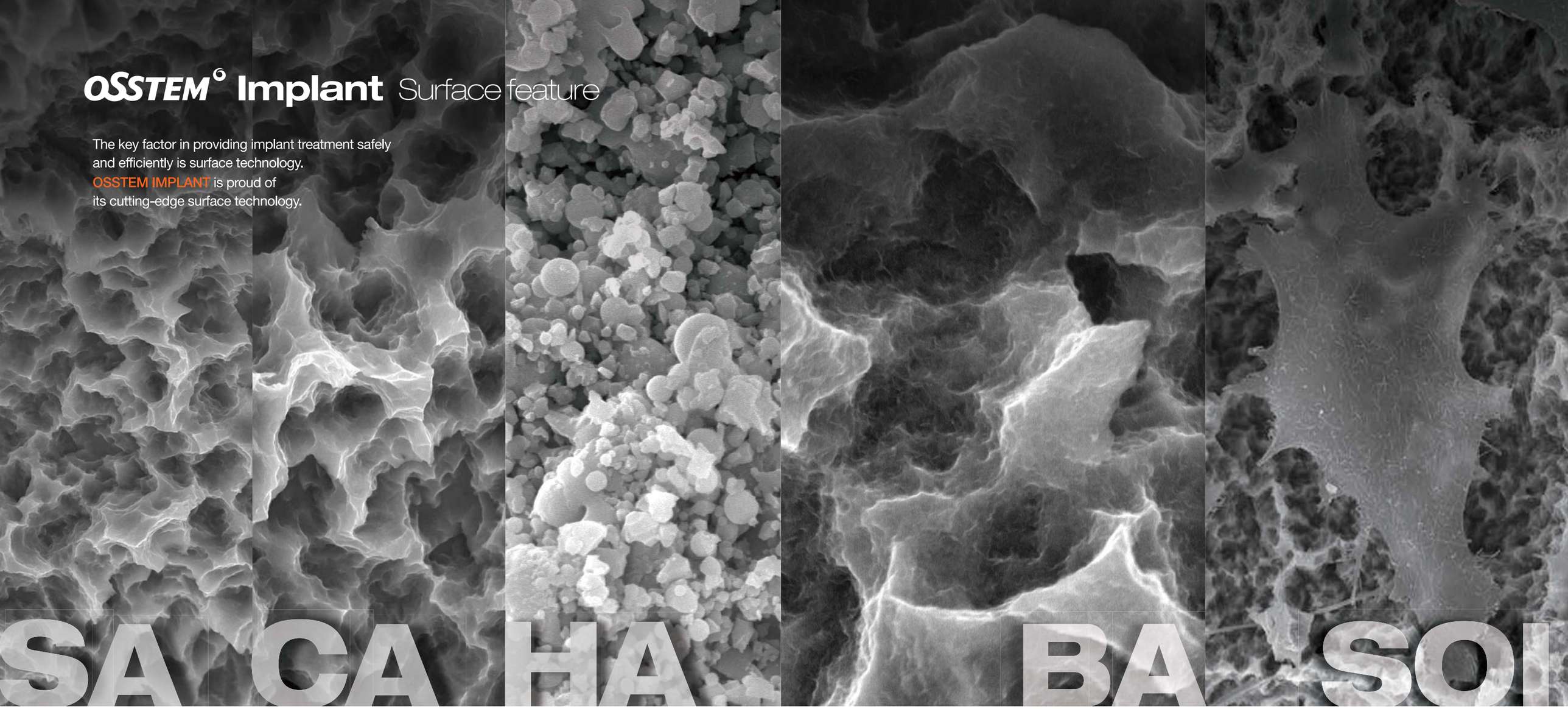

Acid Treated Optimized Surface

· Ra 2.5~3.0㎛ surface roughness
(note : the upper 0.5mm part of the implant has Ra 0.5~0.6um)
· Consistent surface micro pits between 1 to 3㎛
· Surface area is increased by 46 percent compared to RBM treated implants

In-vitro & In-vivo Bone Response

· 20% improvement in osteoblast separation and ossification compared to RBM
· Initial bone reaction performance in animal model (mini-pig)
- 48% improvement in initial stability (RT, 4 weeks) compared to RBM
- 20% improvement in ossification (BIC, 4 weeks) compared to RBM

Super-hydrophilic SA surface suspended in a calcium solution

· Same SA surface morphology
· Optimizing surface reaction by suspension in a calcium (CaCl2) solution
· Increased new bone formation area due to the excellent blood wettability
· Bone response improved in early osseointegration stage compared to standard SA surface

In-vitro & In-vivo Bone Response

· Protein and cellular adhesion tripled compared to SA surfaces
· Initial cellular differentiation by 19 percent compared to SA surfaces (7 days)
· Initial stability increased by 34 percent compared to SA surfaces (RT at 4 weeks)
· Ossification rate Increased by 26 percent compared to SA surfaces (BIC at 4 weeks)

Premium high-crystalline HA-coated surface

· 30 to 60㎛ thick high-crystalline HA coating
· HA coated onto a RBM surface (Ra 3.0 to 3.5㎛)
· High HA crystalline over 98 percent
· Solved the problem with low-crystalline HA resorption

In-vitro & In-vivo Bone Response

· Excellent biocompatibility in HA that is similar to bone
· Initial ossification by osteoblasts doubled compared to SA surfaces (5 days)
· 40% improvement in initial stability (RT, 4 weeks) in animal models compared to SA
· Suitable for poor bone quality, tooth extraction sites or immediate implant insertion

Premium low crystalline nano-HA coated SA surface

· SA surface (Ra 2.5 to 3.0㎛) coated with HA
· 10nm ultra-thin HA coating
· Dual function between titanium and HA
- HA is naturally resorbed during ossification

In-vitro & In-vivo Bone Response

· Advantages of both SA and HA surfaces
- SA's ability to maintain an optimal surface
- HA's ability to form high quality initial bone, even in a poor bone quality
· 40% improvement in ossification (BIC) compared to SA
· It is applicable to all types of bone quality

Next-generation surface coated with special material (K material)

· Activation of blood clot formation
· Avoid carbon adsorption in air
· Coating of K material on SA surface (Ra 2,0~3.0㎛)
· Superior blood wettability with super hydrophilic surface.

In-vitro & In-vivo Bone Response

· Protain and cellular adhesion 130 times increase compared to SA surface
· Initial stability increased by 57 percent compared to SA surfaces (RT at 4 weeks)
· Surface with the shortest duration of surgery

US SYSTEM Contents

016 USII SA Fixture
018 USII CA Fixture
020 USIII SA Fixture
022 USIII CA Fixture
024 USIV SA Fixture
026 Simple Mount
026 Cover Screw
026 Headless Cover Screw
027 Healing Abutment
029 Cement Abutment
032 Cement ID Abutment
035 Angled Abutment
037 UCLA Gold Abutment
038 UCLA NP-Cast Abutment
039 UCLA Plastic Abutment
040 UCLA Temporary Abutment
041 Fixture Pick-Up Impression Coping
042 Fixture Transfer Impression Coping
043 Fixture Lab Analog
043 UCLA Polishing Protector
044 OneFit Abutment
044 Scan Boby
045 Pre-Milled Abutment
046 ZioCera Abutment
047 ZioCera Angled Abutment
048 Safe Abutment
052 Esthetic Abutment
053 Esthetic Healing Cap
053 Esthetic Gold Cylinder
053 Esthetic Plastic Cylinder
054 Esthetic Temporary Cylinder
054 Esthetic Pick-up Impression Coping
055 Esthetic Transfer Impression Coping
055 Esthetic Lab Analog
055 Esthetic Polishing Protector
056 Esthetic-low Abutment
058 Esthetic-low Healing Cap
058 Esthetic-low Gold Cylinder
058 Esthetic-low Plastic Cylinder
059 Esthetic-low Temporary Cylinder Standard Type
059 Esthetic-low Temporary Cylinder Narrow Type
060 Esthetic-low Pick-up Impression Coping
060 Esthetic-low Transfer Impression Coping
060 Esthetic-low Lab Analog
061 Esthetic-low Polishing Protector
062 Multi Angled Abutment
065 O-ring Abutment
066 O-ring Retainer Cap Set
066 O-ring Retainer Set
066 O-ring Set
066 O-ring Lab Analog
067 Locator® Abutment
068 Locator® Male Processing Kit
068 Locator® Replacement Male
068 Locator® Extended Replacement Male
069 Locator® Black Processing Male
069 Locator® Block Out Spacers
069 Locator® Impression Coping
069 Locator® Lab Analog
070 Locator® Core Tool
070 Locator® Torque Driver
071 OneSeal

OSSTEM IMPLANT

US SYSTEM

FIXTURE

016 USII SA Fixture
018 USII CA Fixture
020 USIII SA Fixture
022 USIII CA Fixture
024 USIV SA Fixture
026 Simple Mount
026 Cover Screw
026 Headless Cover Screw
027 Healing Abutment

COMPONENTS

028 **PROSTHETIC FLOW DIAGRAM 1**
029 Cement Abutment
035 Angled Abutment
037 UCLA Gold Abutment
038 UCLA NP-Cast Abutment
039 UCLA Plastic Abutment
040 UCLA Temporary Abutment
044 OneFit Abutment
045 Pre-Milled Abutment
046 ZioCera Abutment
047 ZioCera Angled Abutment
048 Safe Abutment
050 **PROSTHETIC FLOW DIAGRAM 2**
052 Esthetic Abutment
056 Esthetic-low Abutment
062 Multi Angled Abutment
064 **PROSTHETIC FLOW DIAGRAM 3**
065 O-ring Abutment
067 Locator® Abutment
071 OneSeal

USII SA Fixture

- Submerged type implant with external hex connection
- Optimized screw thread design with the ideal SA surface
- Straight body design allows easy insertion depth adjustments
- Corkscrew threading with excellent self-threading effect
- Recommended insertion torque : ≤40 Ncm

※ Fixtures with a diameter of 4.5mm or more are recommended for the posterior area

NoMount fixture order code
: fixture product code (ex : US2R4010S)

Pre-Mounted fixture (fixture + mount + cover screw) order code
: **A** + fixture product code (ex : **A**US2R4010S)

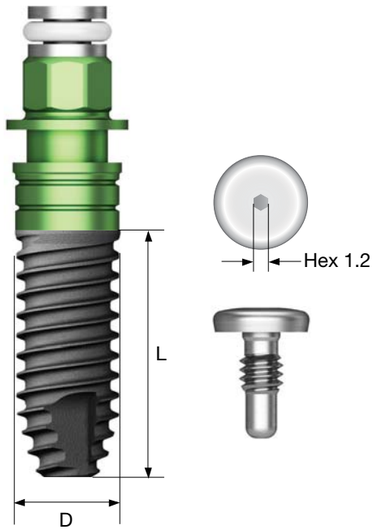

D ø3.5
P ø3.5
Hex 2.4
M

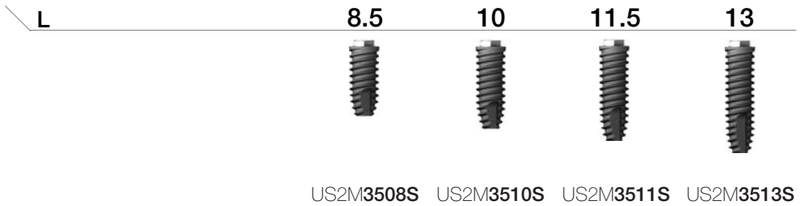

US2M**3508S** US2M**3510S** US2M**3511S** US2M**3513S**

D ø4.0
P ø4.1
Hex 2.7
R

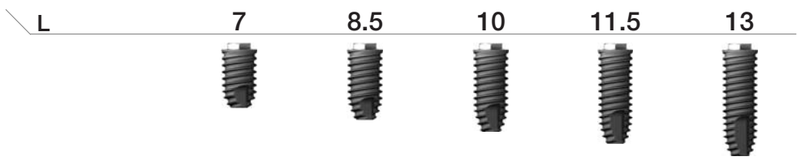

US2R**4007S** US2R**4008S** US2R**4010S** US2R**4011S** US2R**4013S**

D ø4.5
P ø4.1
Hex 2.7
R

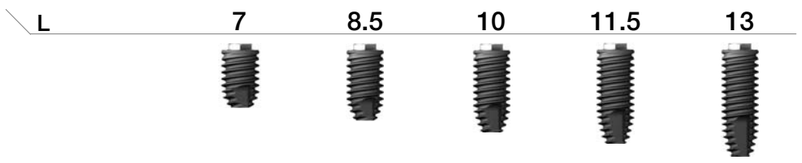

US2R**4507S** US2R**4508S** US2R**4510S** US2R**4511S** US2R**4513S**

D ø5.0
P ø5.1
Hex 3.4
W

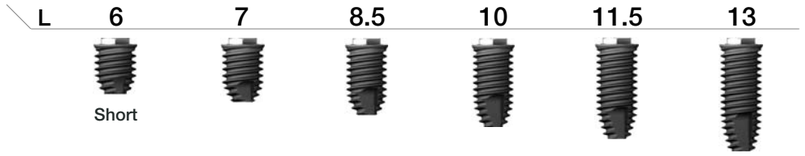

US2W**5006S** US2W**5007S** US2W**5008S** US2W**5010S** US2W**5011S** US2W**5013S**

D ø5.0
P ø5.0
Hex 2.7
W PS

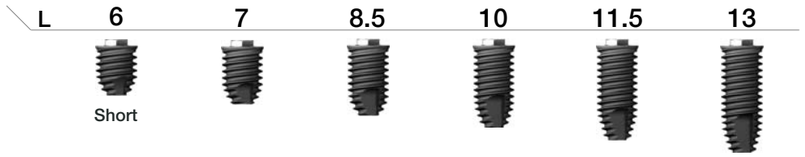

US2P**5006S** US2P**5007S** US2P**5008S** US2P**5010S** US2P**5011S** US2P**5013S**

Nominal and actual diameters may slightly differ
Caution For a short implant, a sufficient healing period is strongly recommended. A short implant should be splinted with another implant when considering prosthetic options.

USII CA Fixture

- Submerged type implant with an external hex connection
- Super-hydrophilic SA surface suspended in a calcium solution
- Straight body design allows easy insertion depth adjustments
- Corkscrew threading with excellent self-threading effect

Ultra-wide

- Ideal for an extracted tooth site in the posterior area, for immediate placement, or for replacing a failed implant
- Recommended insertion torque : ≤40 Ncm

※ Fixtures with a diameter of 4.5mm or more are recommended for the posterior area

Pre-Mounted fixture (fixture + mount + cover screw) **order code**
: **A** + fixture product code (ex : **A**US2R4010C)

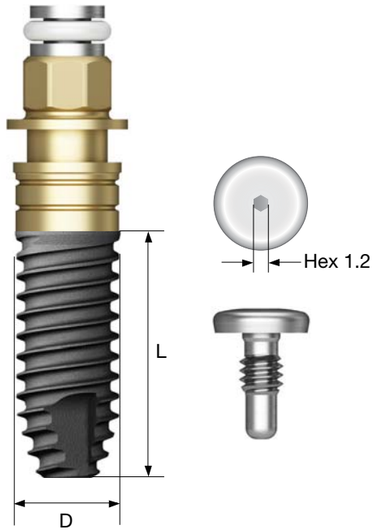

D ø3.5
P ø3.5
Hex 2.4
M

L	8.5	10	11.5	13
	AUS2M3508C	AUS2M3510C	AUS2M3511C	AUS2M3513C

D ø4.0
P ø4.1
Hex 2.7
R

L	7	8.5	10	11.5	13
	AUS2R4007C	AUS2R4008C	AUS2R4010C	AUS2R4011C	AUS2R4013C

D ø4.5
P ø4.1
Hex 2.7
R

L	7	8.5	10	11.5	13
	AUS2R4507C	AUS2R4508C	AUS2R4510C	AUS2R4511C	AUS2R4513C

D ø5.0
P ø5.1
Hex 3.4
W

L	6	7	8.5	10	11.5	13
	Short					
	AUS2W5006C	AUS2W5007C	AUS2W5008C	AUS2W5010C	AUS2W5011C	AUS2W5013C

Ultra-wide

D ø6.0
P ø5.1
Hex 3.4
W

L	6	7	8.5	10	11.5	13
	Short					
	AUS2W6006C	AUS2W6007C	AUS2W6008C	AUS2W6010C	AUS2W6011C	AUS2W6013C

D ø7.0
P ø5.1
Hex 3.4
W

L	6	7	8.5	10	11.5	13
	Short					
	AUS2W7006C	AUS2W7007C	AUS2W7008C	AUS2W7010C	AUS2W7011C	AUS2W7013C

Nominal and actual diameters may slightly differ
Caution For a short implant, a sufficient healing period is strongly recommended. A short implant should be splinted with another implant when considering prosthetic options.

USIII SA Fixture

- A submerged type Implant with external hex connection
- Optimal screw thread design for optimal SA surface implementation
- Taper body design with excellent initial fixation
- Powerful self-threading effect with corkscrew thread
- Acquired initial fixation force for immediate loading in soft bone

Ultra-wide

- Useful for Posterior extraction and immediate implant placement case, and for replacement of failed implant case
- Optimized apex design ensures stable initial fixation force even at the extraction and bottom 3mm
- Recommended implant placement torque : below 40Ncm

※ In posterior single case, fixture with diameter of 4.5mm or more is recommended

NoMount fixture order code
: fixture product code (ex : US3R4010S)

Pre-Mounted fixture (fixture + mount + cover screw) order code
: **A** + fixture product code (ex : **A**US3R4010S)

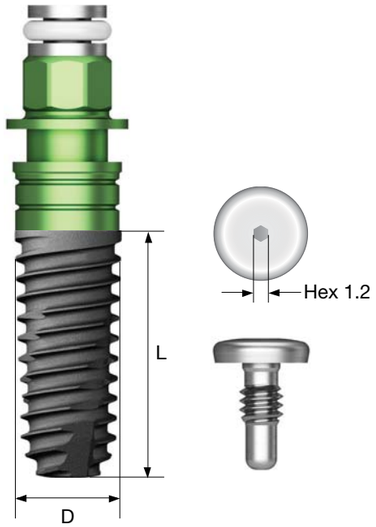

D ø3.5
P ø3.5
Hex 2.4
M

L	8.5	10	11.5	13
	US3M**3508S**	US3M**3510S**	US3M**3511S**	US3M**3513S**

D ø4.0
P ø4.1
Hex 2.7
R

L	7	8.5	10	11.5	13
	US3R**4007S**	US3R**4008S**	US3R**4010S**	US3R**4011S**	US3R**4013S**

D ø4.5
P ø4.1
Hex 2.7
R

L	7	8.5	10	11.5	13
	US3R**4507S**	US3R**4508S**	US3R**4510S**	US3R**4511S**	US3R**4513S**

D ø5.0
P ø5.1
Hex 3.4
W

L	6	7	8.5	10	11.5	13
	Short					
	US3W**5006S**	US3W**5007S**	US3W**5008S**	US3W**5010S**	US3W**5011S**	US3W**5013S**

D ø5.0
P ø5.0
Hex 2.7
W PS

L	6	7	8.5	10	11.5	13
	Short					
	US3P**5006S**	US3P**5007S**	US3P**5008S**	US3P**5010S**	US3P**5011S**	US3P**5013S**

Ultra-wide

D ø6.0
P ø5.1
Hex 3.4
W

L	6	7	8.5	10	11.5	13
	Short					
	US3W**6006S**	US3W**6007S**	US3W**6008S**	US3W**6010S**	US3W**6011S**	US3W**6013S**

D ø7.0
P ø5.1
Hex 3.4
W

L	6	7	8.5	10	11.5	13
	Short					
	US3W**7006S**	US3W**7007S**	US3W**7008S**	US3W**7010S**	US3W**7011S**	US3W**7013S**

Nominal and actual diameters may slightly differ

Caution For a short implant, a sufficient healing period is strongly recommended. A short implant should be splinted with another implant when considering prosthetic options.

USIII CA Fixture

- A submerged type Implant with external hex connection
- Super-hydrophilic SA surface in calcium solution.
- Straight body design that can be easily adjusted in depth
- Powerful self-threading effect with corkscrew thread
- Acquired initial fixation force for immediate loading in soft bone

Ultra-wide

- Useful for Posterior extraction and immediate implant placement case, and for replacement of failed implant case
- Recommended implant placement torque : below 40Ncm

※ In posterior single case, fixture with diameter of 4.5mm or more is recommended

Pre-Mounted fixture (fixture + mount + cover screw) order code
: **A** + fixture product code (ex : **A**US3R4010S)

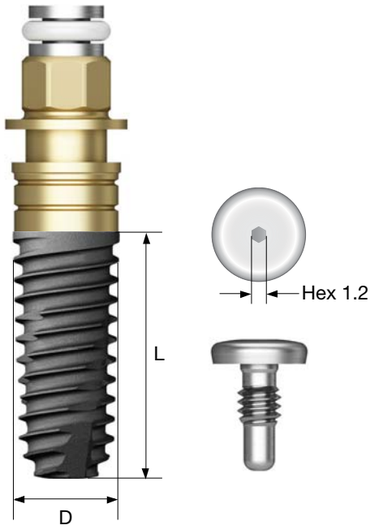

D ø3.5
P ø3.5
Hex 2.4
M

L	8.5	10	11.5	13
	AUS3M**3508S**	AUS3M**3510S**	AUS3M**3511S**	AUS3M**3513S**

D ø4.0
P ø4.1
Hex 2.7
R

L	7	8.5	10	11.5	13
	AUS3R**4007S**	AUS3R**4008S**	AUS3R**4010S**	AUS3R**4011S**	AUS3R**4013S**

D ø4.5
P ø4.1
Hex 2.7
R

L	7	8.5	10	11.5	13
	AUS3R**4507S**	AUS3R**4508S**	AUS3R**4510S**	AUS3R**4511S**	AUS3R**4513S**

D ø5.0
P ø5.1
Hex 3.4
W

L	6	7	8.5	10	11.5	13
	Short					
	AUS3W**5006S**	AUS3W**5007S**	AUS3W**5008S**	AUS3W**5010S**	AUS3W**5011S**	AUS3W**5013S**

Ultra-wide

D ø6.0
P ø5.1
Hex 3.4
W

L	6	7	8.5	10	11.5	13
	Short					
	AUS3W**6006S**	AUS3W**6007S**	AUS3W**6008S**	AUS3W**6010S**	AUS3W**6011S**	AUS3W**6013S**

D ø7.0
P ø5.1
Hex 3.4
W

L	6	7	8.5	10	11.5	13
	Short					
	AUS3W**7006S**	AUS3W**7007S**	AUS3W**7008S**	AUS3W**7010S**	AUS3W**7011S**	AUS3W**7013S**

Nominal and actual diameters may slightly differ

Caution For a short implant, a sufficient healing period is strongly recommended. A short implant should be splinted with another implant when considering prosthetic options.

USIV SA Fixture

- A submerged type implant with external hex connection
- Optimal screw thread design for optimal SA surface implementation
- Fixture for maxillary sinus and soft bone
- Powerful self-threading effect with corkscrew thread
- With a sharp apex design, it can be placed after D4 bone 2.0/3.0mm drilling
- Recommended implant placement torque : below 40Ncm

※ In posterior single case, fixture with diameter of 4.5mm or more is recommended

※ USIV fixture is recommended to be lowered to 15rpm or less because the pitch of the thread is large and the implant placement speed is fast

NoMount fixture (fixture + mount + cover screw) **order code**
: fixture product code (ex : US4R4010S)

Pre-Mounted fixture (fixture + mount + cover screw) **order code**
: **A** + fixture product code (ex : **A**US4R4010S)

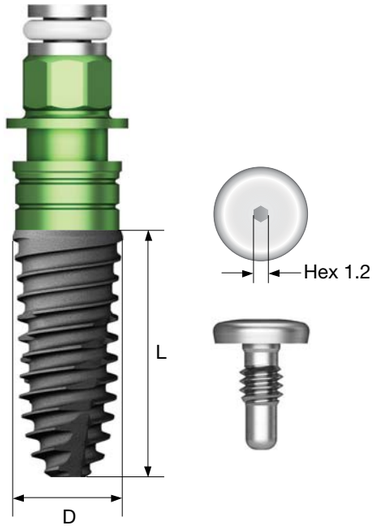

D ø4.0
P ø4.1
Hex 2.7
R

L	7	8.5	10	11.5	13
	US4R**4007S**	US4R**4008S**	US4R**4010S**	US4R**4011S**	US4R**4013S**

D ø4.5
P ø4.1
Hex 2.7
R

L	7	8.5	10	11.5	13
	US4R**4507S**	US4R**4508S**	US4R**4510S**	US4R**4511S**	US4R**4513S**

D ø5.0
P ø5.1
Hex 3.4
W

L	7	8.5	10	11.5	13
	US4W**5007S**	US4W**5008S**	US4W**5010S**	US4W**5011S**	US4W**5013S**

D ø5.0
P ø5.0
Hex 2.7
W PS

L	7	8.5	10	11.5	13
	US4P**5007S**	US4P**5008S**	US4P**5010S**	US4P**5011S**	US4P**5013S**

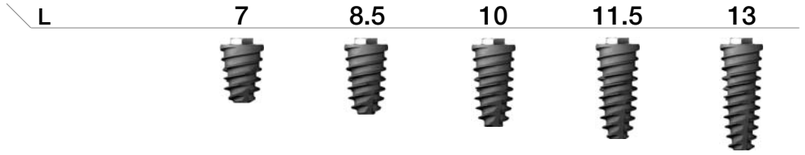

Nominal and actual diameters may slightly differ

Mount & Screw

Simple Mount

- Select according to the fixture platform
- Use of 1.2 hex driver with hand force

※ Disposable, Do not reuse

- P = Platform

M Mini
R Regular
W Wide

P

M

USHA**MM**

R

USHA**MR**

W

USHA**MW**

Cover Screw

- Select according to the fixture platform
- Use of 1.2 hex driver with hand force
- P = Platform

M Mini
R Regular
W Wide

P

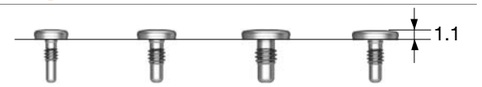

AIC**M100** AIC**R100** AIC**W100** TIC**W100**

Headless Cover Screw

- Used when the soft tissue of the suture part is insufficient
- 0.9 hex(only mini), Use of 1.2 hex driver with hand force
- P = Platform

M Mini
R Regular
W Wide

P

HC**M100** HC**R100** HC**W100**

Healing Abutment

- Use a 1.2 hex driver
- Recommended tightening torque : 5~8Ncm

M Mini
R Regular
W Wide

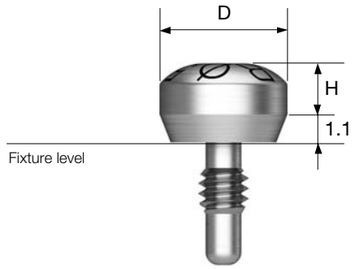

D \ H	2.0	3.0	4.0	5.5	7.0
					
Ø 4.0	-	AIHM403	-	AIHM405	-
Ø 5.0	-	AIHM503	-	AIHM505	-

D \ H	2.0	3.0	4.0	5.5	7.0
					
Ø 4.1 One Piece	-	AIOHR403	-	AIOHR405	AIOHR407
Ø 4.1 Two Piece	-	AIHR403	-	AIHR405	AIHR407
Ø 5.0	AIHR502	AIHR503	AIHR504	AIHR505	AIHR507
Ø 6.0	AIHR602	AIHR603	AIHR604	AIHR605	AIHR607

D \ H	2.0	3.0	4.0	5.5	7.0
					
Ø 5.1 One Piece	-	AIOHW503	-	AIOHW505	-
Ø 5.1 Two Piece	-	AIHW503	-	AIHW505	-
Ø 6.0	AIHW602	AIHW603	AIHW604	AIHW605	-
Ø 7.0	AIHW702	AIHW703	AIHW704	AIHW705	-
Ø 6.0 PS		TIHW603		TIHW605	-

PROSTHETIC FLOW DIAGRAM 1

Cement / Angled / UCLA / OneFit / ZioCera / Safe

Fixture Level Impression

Cement Abutment

- Cement/combination-retained prosthesis
- Fixture level impression
- Use a 1.2 hex driver
- Recommended tightening torque : 30Ncm
- Packing unit : abutment + Ti screw

Abutment + Ti screw order code
: product code + **TH** (ex : CAR525**TH**)

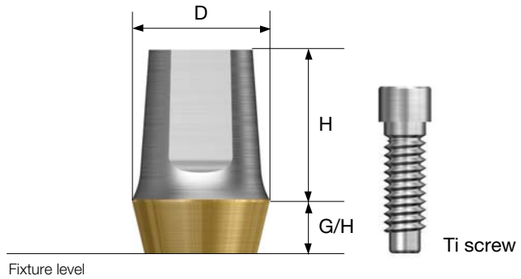

D ø4.0

M

Ti screw
: USABSMT

H \ G/H	1.0	2.0	3.0	4.0	1.0	2.0	3.0	4.0
Type	Hex				Non-Hex			
7.0	-	CAM427	-	CAM447	-	CAM427N	-	CAM447N

D ø4.1

R

Ti screw
: ASR200

H \ G/H	1.0	2.0	3.0	4.0	1.0	2.0	3.0	4.0
Type	Hex				Non-Hex			
7.0	-	-	CAR437	-	-	-	CAR437N	-

Cement Abutment

D ø5.0

R

Ti screw
: ASR200

H \ G/H	1.0	2.0	3.0	4.0	1.0	2.0	3.0	4.0
Type	Hex				Non-Hex			
4.0	CAR514	CAR524	CAR534	CAR544	CAR514N	CAR524N	CAR534N	CAR544N
5.5	CAR515	CAR525	CAR535	CAR545	CAR515N	CAR525N	CAR535N	CAR545N
7.0	CAR517	CAR527	CAR537	CAR547	CAR517N	CAR527N	CAR537N	CAR547N

D ø6.0

R

Ti screw
: ASR200

H \ G/H	1.0	2.0	3.0	4.0	1.0	2.0	3.0	4.0
Type	Hex				Non-Hex			
5.5	CAR615	CAR625	CAR635	CAR645	CAR615N	CAR625N	CAR635N	CAR645N

D ø5.1

W

Ti screw
: ASW200

H \ G/H	1.0	2.0	3.0	4.0	1.0	2.0	3.0	4.0
Type	Hex				Non-Hex			
7.0	-	-	CAW537		-	-	CAW537N	-

D ø6.0

W

Ti screw
: ASW200

H \ G/H	1.0	2.0	3.0	4.0	1.0	2.0	3.0	4.0
Type	Hex				Non-Hex			
4.0	CAW614	CAW624	CAW634	CAW644	CAW614N	CAW624N	CAW634N	CAW644N
5.5	CAW615	CAW625	CAW635	CAW645	CAW615N	CAW625N	CAW635N	CAW645N
7.0	CAW617	CAW627	CAW637	CAW647	CAW617N	CAW627N	CAW637N	CAW647N

D ø7.0

W

Ti screw
: ASW200

H \ G/H	1.0	2.0	3.0	4.0	1.0	2.0	3.0	4.0
Type	Hex				Non-Hex			
5.5	CAW715	CAW725	CAW735	CAW745	CAW715N	CAW725N	CAW735N	CAW745N

D ø6.0

W PS

Ti screw
: ASR200

H \ G/H	1.0	2.0	3.0	4.0	1.0	2.0	3.0	4.0
Type	Hex				Non-Hex			
7.0	-	TCAW627	-	TCAW647	-	TCAW627N	-	TCAW647N

Cement ID Abutment

• Non-insured cement abutment

Abutment + Ti screw order code
: product code + **TH** (ex : BCAR525**TH**)

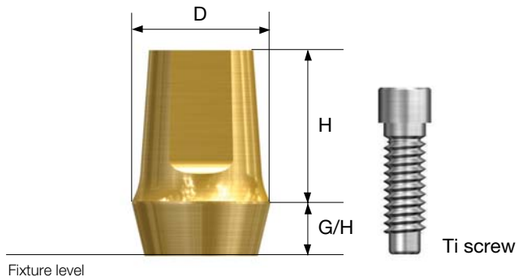

D ø4.0

M

Ti screw
: USABSMT

H \ G/H	1.0	2.0	3.0	4.0	1.0	2.0	3.0	4.0
Type	Hex				Non-Hex			
7.0	-	BCAM427	-	BCAM447	-	BCAM427N	-	BCAM447N

D ø4.1

R

Ti screw
: ASR200

H \ G/H	1.0	2.0	3.0	4.0	1.0	2.0	3.0	4.0
Type	Hex				Non-Hex			
7.0	-	-	BCAR437	-	-	-	BCAR437N	-

D ø5.0

R

Ti screw
: ASR200

H \ G/H	1.0	2.0	3.0	4.0	1.0	2.0	3.0	4.0
Type	Hex				Non-Hex			
4.0	BCAR514	BCAR524	BCAR534	BCAR544	BCAR514N	BCAR524N	BCAR534N	BCAR544N
5.5	BCAR515	BCAR525	BCAR535	BCAR545	BCAR515N	BCAR525N	BCAR535N	BCAR545N
7.0	BCAR517	BCAR527	BCAR537	BCAR547	BCAR517N	BCAR527N	BCAR537N	BCAR547N

D ø6.0

R

Ti screw
: ASR200

H \ G/H	1.0	2.0	3.0	4.0	1.0	2.0	3.0	4.0
Type	Hex				Non-Hex			
5.5	BCAR615	BCAR625	BCAR635	BCAR645	BCAR615N	BCAR625N	BCAR635N	BCAR645N

D ø5.1

W

Ti screw
: ASW200

H \ G/H	1.0	2.0	3.0	4.0	1.0	2.0	3.0	4.0
Type	Hex				Non-Hex			
7.0	-	-	BCAW537	-	-	BCAW537N	-	

D ø6.0

W

Ti screw
: ASW200

H \ G/H	1.0	2.0	3.0	4.0	1.0	2.0	3.0	4.0
Type	Hex				Non-Hex			
4.0	BCAW614	BCAW624	BCAW634	BCAW644	BCAW614N	BCAW624N	BCAW634N	BCAW644N
5.5	BCAW615	BCAW625	BCAW635	BCAW645	BCAW615N	BCAW625N	BCAW635N	BCAW645N
7.0	BCAW617	BCAW627	BCAW637	BCAW647	BCAW617N	BCAW627N	BCAW637N	BCAW647N

Cement ID Abutment

D ø7.0

W

Ti screw
: ASW200

H \ G/H	1.0	2.0	3.0	4.0	1.0	2.0	3.0	4.0
Type	Hex				Non-Hex			
5.5	BCAW715	BCAW725	BCAW735	BCAW745	BCAW715N	BCAW725N	BCAW735N	BCAW745N

D ø6.0

W PS

Ti screw
: ASR200

H \ G/H	1.0	2.0	3.0	4.0	1.0	2.0	3.0	4.0
Type	Hex				Non-Hex			
7.0	-	BTCAW627	-	BTCAW647	-	BTCAW627N	-	BTCAW647N

Angled Abutment

- Cement/combination-retained prosthesis
- Angle compensation of 15/25°
- Double hex(dodecagon) connection allows 12 positions
- Fixture level impression
- Use a 1.2 hex driver
- Recommended tightening torque : 30Ncm
- Packing unit : abutment + Ti screw

Abutment + Ti screw order code
: product code + **TH** (ex : AAR5152C**TH**)

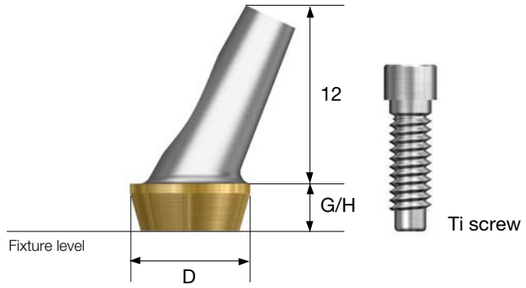

D ø4.0

M

Ti screw
: USABSMT

G/H	2.0	4.0	2.0	4.0
Angle	15°		25°	
	AAM4152C	AAM4154C	AAM4252C	AAM4254C

D ø5.0

R

Ti screw
: ASR200

G/H	2.0	4.0	2.0	4.0
Angle	15°		25°	
	AAR5152C	AAR5154C	AAR5252C	AAR5254C

D ø6.0

W

Ti screw
: ASW200

G/H	2.0	4.0	2.0	4.0
Angle	15°		25°	
	AAW6152C	AAW6154C	AAW6252C	AAW6254C

Angled Abutment

D ø6.0

W PS

Ti screw
: ASR200

G/H	2.0	4.0	2.0	4.0
Angle	15°		25°	
				
	TAAW**6152C**	TAAW**6154C**	TAAW**6252C**	TAAW**6254C**

UCLA Gold Abutment

- Cement/combination/screw abutment for prosthesis manufacturing
- Used to make customized prosthesis by casting with gold alloy
- Melting temperature of Abutment : 1,400~1,450˚C
- Fixture level impression
- Use of 1.2 hex driver
- Recommended torque of tightening screw : 30Ncm
- Packing unit : abutment + Ti screw

Abutment + Ti screw order code
: product code + **TH** (ex : GCR200**TH**)

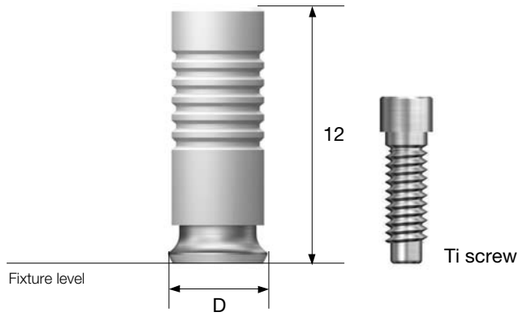

D ø4.0

M

Ti screw
: USABSMT

Type	Hex	Non-Hex
		
	GCM**200**	GCM**100**

D ø4.5

R

Ti screw
: ASR200

Type	Hex	Non-Hex
		
	GCR**200**	GCR**100**

D ø5.5

W

Ti screw
: ASW200

Type	Hex	Non-Hex
		
	GCW**200**	GCW**100**

D ø5.5

W PS

Ti screw
: ASR200

Type	Hex	Non-Hex
		
	TGCW**200**	TGCW**100**

UCLA NP-Cast Abutment

- Cement/combination/screw-retained prosthesis
- Customized prosthesis cast with non precious alloys
- Abutment melting point : 1400~1550˚C
- Fixture level impression
- Use a 1.2 hex driver
- Recommended tightening torque : 30Ncm
- Packing unit : abutment + Ti screw

Abutment + Ti screw order code
: product code + **TH** (ex : NCR200**TH**)

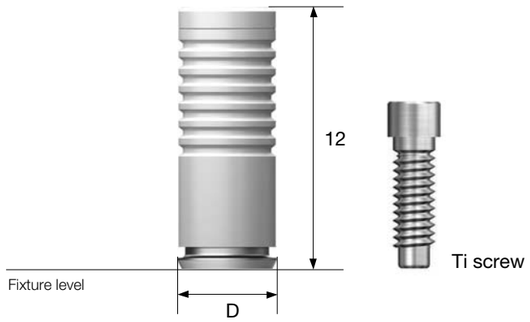

D ø4.0

M

Ti screw
: USABSMT

Type	Hex	Non-Hex
	NCM200	NCM100

D ø4.5

R

Ti Screw
: ASR200

Type	Hex	Non-Hex
	NCR200	NCR100

D ø5.5

W

Ti screw
: ASR200

Type	Hex	Non-Hex
	NCW200	NCW100

D ø5.5

W PS

Ti screw
: ASR200

Type	Hex	Non-Hex
	TNCW200	TNCW100

UCLA Plastic Abutment

- Cement/combination/screw-retained prosthesis
- Customized prosthesis, cast with gold alloys up to the joint
- Fixture level impression
- Use a 1.2 hex driver
- Recommended tightening torque : 30Ncm
- Packing unit : abutment + Ti screw

Abutment + Ti screw order code
: product code + **TH** (ex : PSR200**TH**)

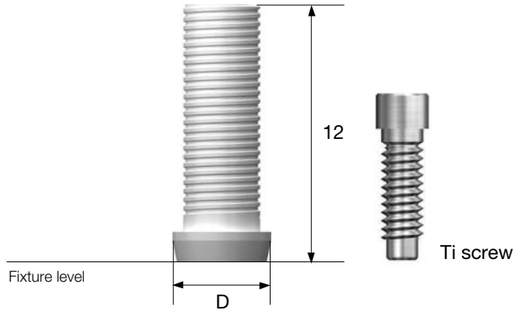

D ø4.0

M

Ti screw
: USABSMT

Type	Hex	Non-Hex
	PSM200	PSM100

D ø4.5

R

Ti screw
: ASR200

Type	Hex	Non-Hex
	PSR200	PSR100

D ø5.5

W

Ti screw
: ASW200

Type	Hex	Non-Hex
	PSW200	PSW100

D ø5.5

W PS

Ti screw
: ASR200

Type	Hex	Non-Hex
	TPSW200	TPSW100

UCLA Temporary Abutment

- Cement/screw-retained prosthesis
- A trim able provisional prosthesis (made of Ti Gr-3)
- Fixture level impression
- Use a 1.2 hex driver
- Recommended tightening torque : 30Ncm
- Packing unit : abutment + Ti screw

Abutment + Ti screw order code
: product code + **TH** (ex : TAR200**TH**)

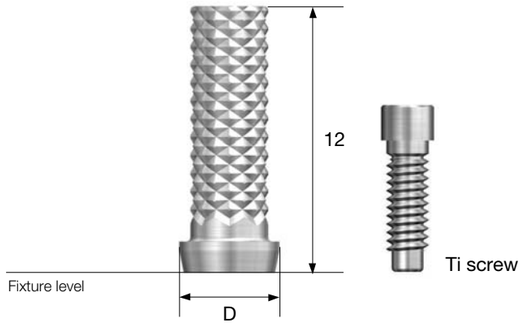

D ø4.0 — Type: Hex / Non-Hex

M

Ti screw
: USABSMT

TAM**200** TAM**100**

D ø4.5 — Type: Hex / Non-Hex

R

Ti screw
: ASR200

TAR**200** TAR**100**

D ø5.5 — Type: Hex / Non-Hex

W

Ti screw
: ASW200

TAW**200** TAW**100**

D ø5.5 — Type: Hex / Non-Hex

W PS

Ti screw
: ASR200

TTAW**200** TTAW**100**

UCLA Abutment Components

Fixture Pick-Up Impression Coping

- Components for fixture level impression taking
- For open tray impressions
- Unique design that is fixed position in the impression material
- Use a 1.2 hex driver (torque manually)
- Packing unit : impression coping body + guide pin(*)

M Mini (Yellow)
R Regular (Green)
W Wide (Blue)

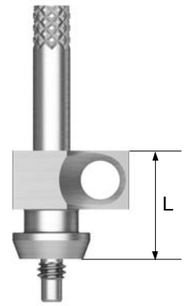

D \ L	7		12		Guide Pin 10	Guide Pin 15	Guide Pin 17
Type	Hex	Non-Hex	Hex	Non-Hex			
					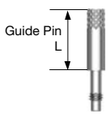		
ø 4.0	-	-	ICFM**400**	ICFM**400N**	-	CSM**150**	-
ø 5.0	ICSR**500**	ICSR**500N**	ICFR**500**	ICFR**500N**	CSR**100**	CSR**150***	CSR**170**
ø 6.0	-	-	ICFR**600**	ICFR**600N**	-	-	-
ø 6.0	ICSW**600**	ICSW**600N**	ICFW**600**	ICFW**600N**	CSW**100**	CSW**150***	-
ø 6.0 PS	-	-	TICFW**600**	TICFW**600N**	-	TCSW**150**	-

UCLA Abutment Components

Fixture Transfer Impression Coping

- Components for fixture level impression taking
- For closed tray impressions
- Triangular arc ensures precise placement
- Use a 1.2 hex driver (torque manually)
- Packing unit
  - Hex : impression coping body + guide pin
  - Non-hex : impression coping

M Mini (Yellow)

R Regular (Green)

W Wide (Blue)

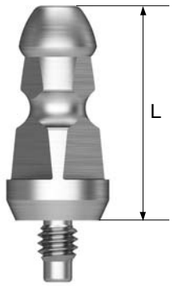

D \ L	10.5		13.5	
Type	Hex	Non-Hex	Hex	Non-Hex
				
ø 4.0	ICPM**402S**	ICPM**401S**	ICPM**402L**	ICPM**401L**
ø 5.0	ICPR**502S**	ICPR**501S**	ICPR**502L**	ICPR**501L**
ø 6.0	ICPW**602S**	ICPW**601S**	ICPW**602L**	ICPW**601L**
ø 6.0 PS	-	-	TICPW**602**	TICPW**601**

UCLA Abutment Components

Fixture Lab Analog

- A lab analog for fixture level impressions
- Packing unit : lab analog

M Mini

R Regular

W Wide

C

M	FAM**300**
R	FAR**300**
W	FAW**300**
W PS	TFAW**300**
W R-type	RFAW**300**

UCLA Polishing Protector

- Protects GoldCast/plastic cylinder joints during polishing process
- Use a 1.2 hex driver (torque manually)

M Mini

R Regular

W Wide

C

M	UPCM**100**
R	UPCR**100**
W	UPCW**100**
W PS	TUPCW**100**
W R-type	RUPCW**100**

OneFit Abutment

- Cement/combination abutment for prosthesis manufacturing
- Custom abutment manufactured by CAD/CAM
- Fixture level impression
- Abutment level impression when scan healing abutment is used
- Production period (based on working day)
  - Titanium : 5 days
  - Titanium + gold color : 7 days
- Use of 1.2 hex driver
- Recommended tightening torque : 30Ncm
- Packing unit : abutment + Ti screw

Scan Boby

- Scan body for titanium custom abutment production
- Convenient specification classification through screw color
- Use of 1.2 hex driver with hand force
- Packing unit : scan body + Ti screw

Scan body + screw order code
: product code + **TH** (ex : USSBM**TH**)

M Mini
R Regular
W Wide

M
Yellow color screw
: USSBMS

USSBM

R
Green color screw
: USSBRS

USSBR

W
Blue color screw
: USSBWS

USSBW

W PS
Green color screw
: USSBRS

USSBWP

Pre-Milled Abutment

- Manufacturing custom abutment with dental milling equipment
- Superior tightening accuracy compared to non-genuine
- Packing unit : pre-milled abutment + Ti

Pre-milled abutment + screw order code
: product code + **TH** (ex : USPM10AGR**TH**)

Equipment	Implant	D	Specifications		Code
DooWon ARUM	Osstem US	Ø10	Mini	Hex	USPM10AGMTH
			Mini	Non-hex	USPM10AGM**NTH**
			Regular	Hex	USPM10AGRTH
			Regular	Non-hex	USPM10AGR**NTH**
			Wide	Hex	USPM10AGWTH
			Wide	Non-hex	USPM10AGW**NTH**

ZioCera Abutment

- Cement/combination/screw-retained prosthesis
- Zirconium abutment for an all ceramic prostheses ideal for anterior - esthetic zone
- Fixture level impression
- Use a 1.2 hex driver
- Abutment screw included
- Recommended tightening torque : 30Ncm(regular)
- Packing unit : abutment + Ti screw

Abutment + Ti screw order code
: product code + **TH** (ex : ZAR537**TH**)

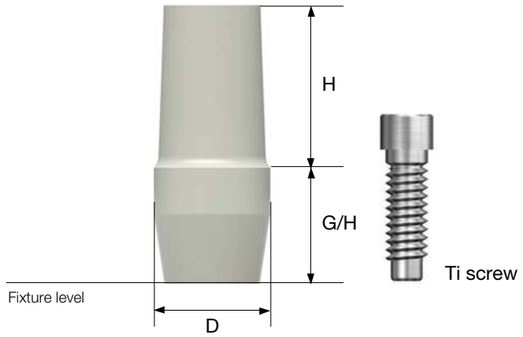

D ø5.0

M

Ti screw
: ASM200

H \ G/H	3.0	5.0
7.0	ZAM537	ZAM557

D ø5.0

R

Ti screw
: ASR200

H \ G/H	3.0	5.0
7.0	ZAR537	ZAR557

D ø6.0

R

Ti screw
: ASR200

H \ G/H	3.0	5.0
7.0	ZAR637	ZAR657

ZioCera Angled Abutment

- Cement/combination/screw-retained prosthesis
- Zirconium abutment for all ceramic prostheses ideal for the anterior esthetic zone
- Angle compensation up to 23° without the need for additional adjustment
- Fixture level impression
- Use a 1.2 hex driver
- Recommended tightening torque : 30Ncm(regular)
- Packing unit : abutment + Ti screw

Abutment + Ti screw order code
: product code + **TH** (ex : ZAAR5173**TH**)

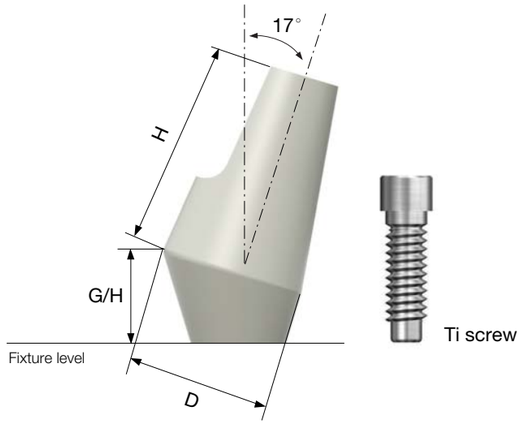

D ø5.5

R

Ti screw
: ASR200

H \ G/H	3.0
9.0	ZAAR5173

D ø6.5

R

Ti screw
: ASR200

H \ G/H	4.0
9.0	ZAAR6174

Safe Abutment

- Cement-retained prosthesis
- Designed to minimize screw loosening
- No modification or trimming is required
- Fixture/abutment level impression
- Use a 1.2 hex driver
- Recommended tightening torque : 30Ncm
- Packing unit : abutment + Ti screw + carrier cap + protect cap

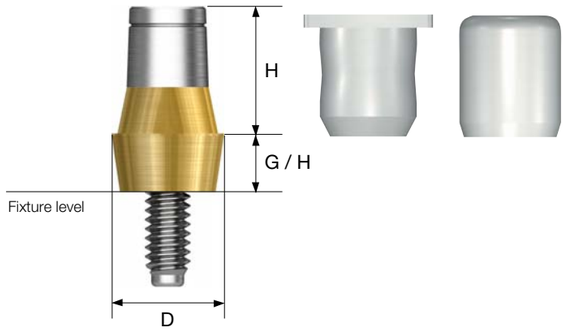

D ø4.8

R

H \ G/H	1.0	2.5	4.0
			
4.0	SFAR514SC	SFAR524SC	SFAR544SC
5.5	SFAR515SC	SFAR525SC	SFAR545SC
7.0	SFAR517SC	SFAR527SC	SFAR547SC

D ø6.0

W

H \ G/H	1.0	2.5	4.0
			
4.0	SFAW614SC	SFAW624SC	SFAW644SC
5.5	SFAW615SC	SFAW625SC	SFAW645SC

PROSTHETIC FLOW DIAGRAM 2

Esthetic / Esthetic-low / Multi Angled

Abutment Level Impression

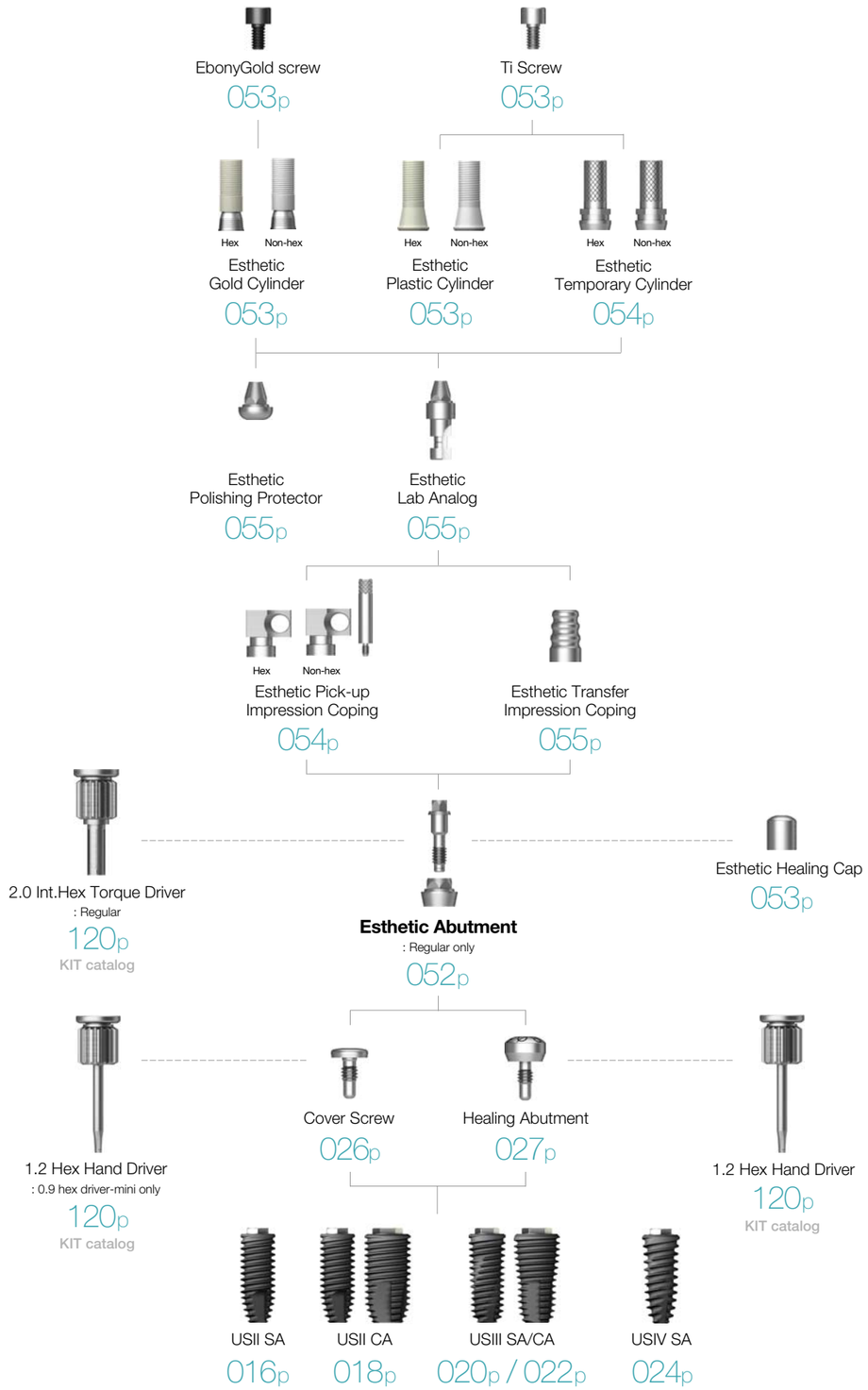

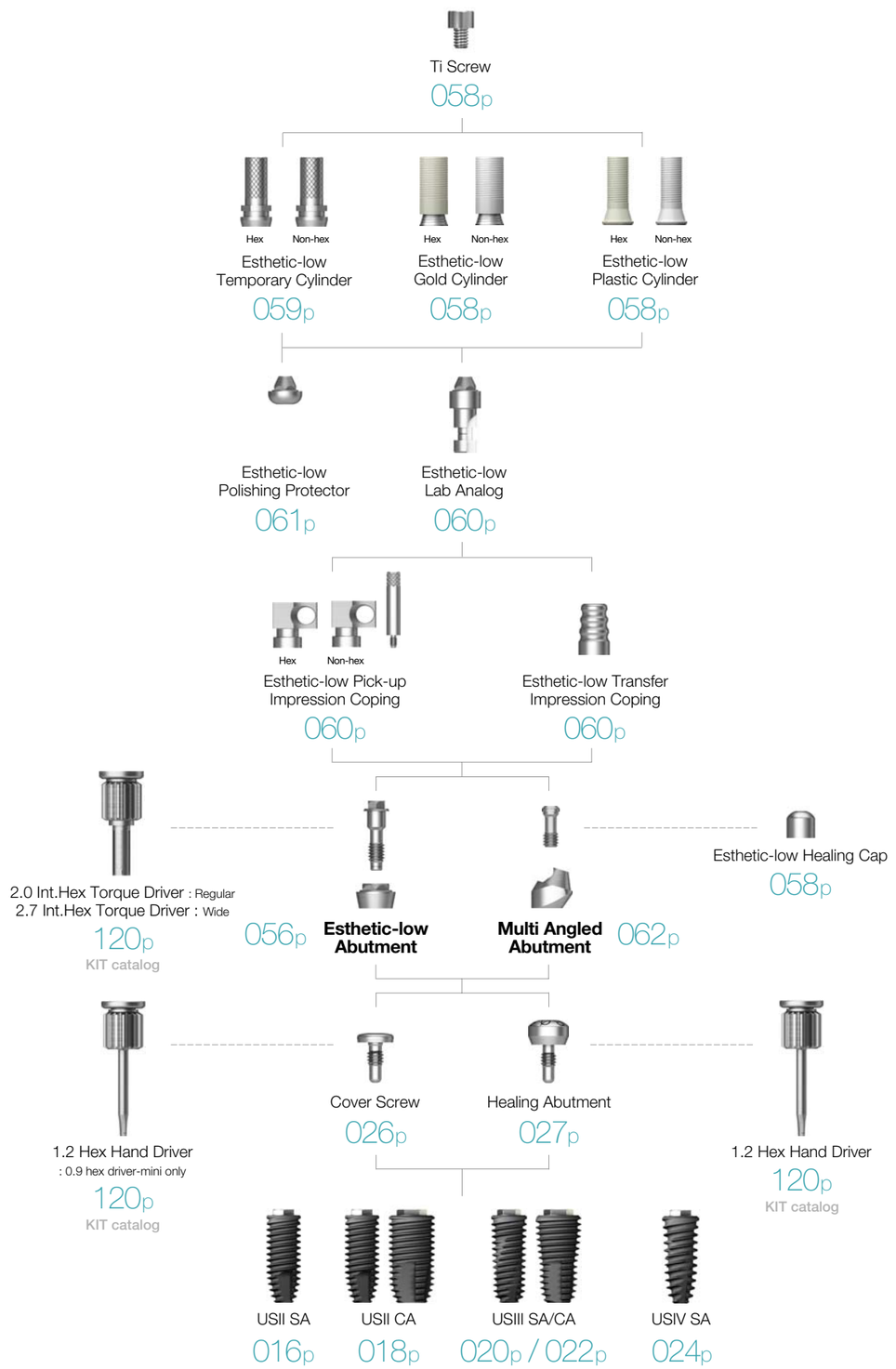

Esthetic Abutment

- Screw-retained prosthesis in multiple scenarios
- Connection is located near the gum line
- Abutment-level impression
- Angle compensation of up to 30˚
- Tightening with exclusive outer driver (code : TIHD20L / TIHD20S)
- Recommended tightening torque : 30Ncm
- Packing unit : abutment + Ti screw

Abutment + Ti screw order code
: product code + **TH** (ex : EAR200**TH**)

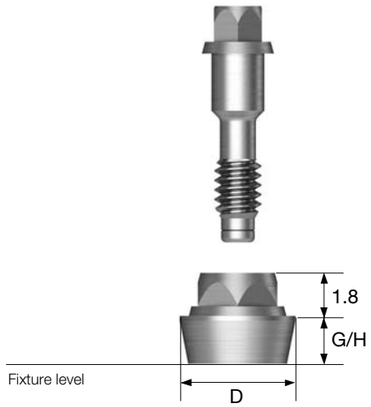

D ø4.8

R

G/H	1.0	2.0	3.0	4.0
	EAR**100**	EAR**200**	EAR**300**	EAR**400**

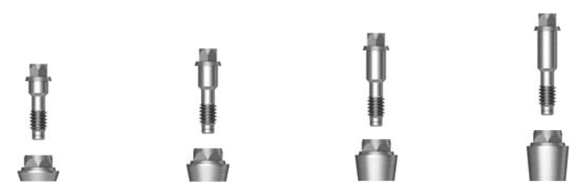

Esthetic Abutment Components

Esthetic Healing Cap

- Protective cap
- Use a 1.2 hex driver (torque manually)

R Regular

D \ H	6.0
ø 4.8	EHC100

Esthetic Gold Cylinder

- Screw-retained prosthesis
- Customizable prosthesis, cast with gold alloy
- Cylinder melting point : 1400~1450˚C
- Use a 1.2 hex driver
- Recommended tightening torque : 20Ncm
- Packing unit : cylinder + Ti cylinder screw

Cylinder + EbonyGold screw order Code
: product code + **TH** (ex : EGC200**TH**)

R Regular

D \ Type	Hex	Non-Hex
ø 4.8	EGC**200**	EGC**100**

Ti screw
: TS200

Esthetic Plastic Cylinder

- Screw-retained prosthesis
- Customizable prosthesis, cast with non precious alloys
- Use a 1.2 hex driver
- Recommended tightening torque : 20Ncm
- Packing unit : cylinder + Ti cylinder screw

Cylinder + Ti Screw order code
: product code + **TH** (ex : ETT200**TH**)

R Regular

D \ Type	Hex	Non-Hex
ø 4.8	EPS**200**	EPS**100**

Ti screw
: TS200

Esthetic Abutment Components

Esthetic Temporary Cylinder

- Used in fabricating a temporary prosthesis (Ti Gr-3)
- Use a 1.2 hex driver
- Recommended tightening torque : 20Ncm
- Packing unit : cylinder + Ti cylinder screw

Cylinder + Ti screw order code
: product code + **TH** (ex : ETT200**TH**)

R Regular

D \ Type	Hex	Non-Hex
Ø 4.8	ETT200	ETT100

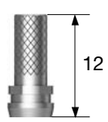

Ti screw
: TS200

Esthetic Transfer Impression Coping

- Transfer Impression coping for esthetic abutment
- Use a 1.2 hex driver (torque manually)

R Regular

D \ H	8.0
Ø 4.8	ETR100

Esthetic Pick-up Impression Coping

- Pick up impression coping for esthetic abutment
- Use a 1.2 hex driver (fastened manually)
- Packing unit : impression coping body + guide pin(*)

R Regular

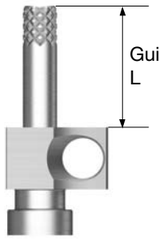

D \ L	Hex	Non-Hex	Guide Pin 5	Guide Pin 10	Guide Pin 12	Guide Pin 15
Ø 4.8	ESR200	ESR100	GP100	GP150*	GP170	GP200

Esthetic Lab Analog

- Lab analog for esthetic abutment
- Use a 1.2 hex driver (torque manually)

R Regular

D
Ø 4.8

ERR300

Esthetic Polishing Protector

- Protects GoldCast/plastic cylinder joints during polishing process
- Use a 1.2 hex driver (torque manually)

R Regular

D
Ø 4.8

EPCR100

Esthetic-low Abutment

- Screw-retained prosthesis for multiple case scenarios
- The prosthetic connection matches the crest of the soft tissue
- Abutment level impression
- Angle compensation of up to 48°
- Torque using a dedicated outer driver
  - Regular : 2.0 internal hex driver (code : TIHD20S/TIHD20L)
  - Wide : 2.7 internal hex driver (code : TIHD27)
- Recommended tightening torque : 30Ncm
- Packing unit : abutment + Ti screw

Abutment + Ti screw order code
: product code + **TH** (ex : MER200**TH**)

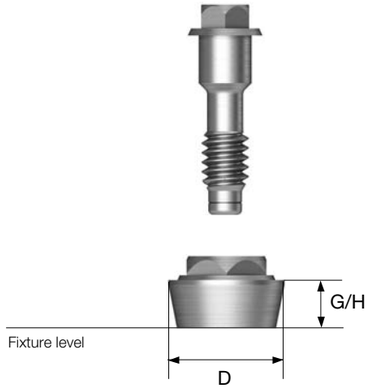

D ø4.8

M

G/H	1.0	2.0	3.0	4.0
	MEM**100**	MEM**200**	MEM**300**	MEM**400**

D ø4.8

R

G/H	1.0	2.0	3.0	4.0
	MER**100**	MER**200**	MER**300**	MER**400**

D ø5.5

W

G/H	1.0	2.0	3.0	4.0
	MEW**100**	MEW**200**	MEW**300**	MEW**400**

D ø5.5

W PS

G/H	1.0	2.0	3.0	4.0
	TMEW**100**	TMEW**200**	TMEW**300**	TMEW**400**

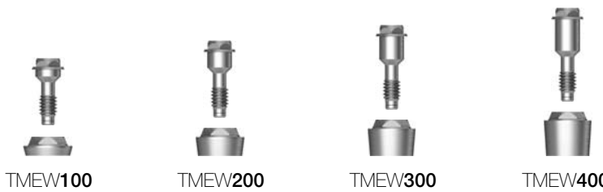

Esthetic-low Abutment Components

Esthetic-low Healing Cap

- A protective cap
- Use a 1.2 hex driver (torque manually)

M Mini
R Regular
W Wide

D \ H	6.0
	
Ø 4.8/Ø 4.8	MHCR100
Ø 5.5/Ø 5.5 PS	MHCW100

Esthetic-low Gold Cylinder

- Screw-retained prosthesis
- Cast with gold alloys
- Cylinder melting point : 1400~1450˚C
- Use a 1.2 hex driver
- Recommended tightening torque : 20Ncm
- Packing unit : cylinder + Ti cylinder screw

Cylinder + Ti screw order code
: product code + **TH** (ex : MGR200**TH**)

M Mini
R Regular
W Wide

D \ Type	Hex	Non-Hex
		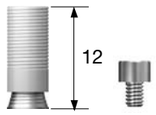
Ø 4.8/Ø 4.8	MGR200	MGR100
Ø 5.5/Ø 5.5 PS	MGW200	MGW100

Ti screw
: MTS200 (Ø 4.8 / Ø 4.8)
: WTS200 (Ø 5.5 / Ø 5.5PS)

Esthetic-low Plastic Cylinder

- Screw-retained prosthesis
- Cast with non-precious metal alloys
- Use a 1.2 hex driver
- Recommended tightening torque : 20Ncm
- Packing unit : cylinder + Ti cylinder screw

Cylinder + Ti screw order code
: Product code + **TH** (ex : MEPR200**TH**)

M Mini
R Regular
W Wide

D \ Type	Hex	Non-Hex
		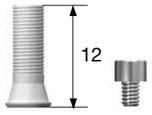
Ø 4.8/Ø 4.8	MEPR200	MEPR100
Ø 5.5/Ø 5.5 PS	MEPW200	MEPW100

Ti screw
: MTS200 (Ø 4.8 / Ø 4.8)
: WTS200 (Ø 5.5 / Ø 5.5PS)

Esthetic-low Temporary Cylinder

Standard Type

- Used in fabricating a temporary prosthesis (Ti Gr-3)
- Use a 1.2 hex driver
- Recommended tightening torque : 20Ncm
- Packing unit : cylinder + Ti cylinder screw

Cylinder + Ti screw order code
: product code + **TH** (ex : MTR200**TH**)

M Mini
R Regular
W Wide

D \ Type	Hex	Non-Hex
		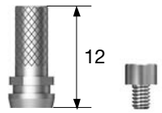
Ø 4.8/Ø 4.8	MTR200	MTR100
Ø 5.5/Ø 5.5 PS	MTW200	MTW100

Ti screw
: MTS200 (Ø 4.8 / Ø 4.8)
: WTS200 (Ø 5.5 / Ø 5.5PS)

Narrow Type

- Used in fabricating a temporary prosthesis (Ti Gr-3)
- Ideal for overdenture cases due to its smaller diameter
- Use a 1.2 hex driver
- Recommended tightening torque : 20Ncm
- Packing unit : cylinder + Ti cylinder screw

Cylinder + Ti screw order code
: product code + **TH** (ex : NMTR200**TH**)

M Mini
R Regular
W Wide

D \ Type	Hex	Non-Hex
		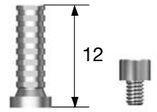
Ø 4.8/Ø 4.8	NMTR200	NMTR100
Ø 5.5/Ø 5.5 PS	NMTW200	NMTW100

Ti screw
: MTS200 (Ø 4.8 / Ø 4.8)
: WTS200 (Ø 5.5 / Ø 5.5PS)

Esthetic-low Abutment Components

Esthetic-low Pick-up Impression Coping

- Components for fixture level impression taking
- Pick up impression coping for esthetic-low abutment
- Use a 1.2 hex driver (torque manually)
- Packing unit : impression coping body + guide pin(*)

M Mini
R Regular
W Wide

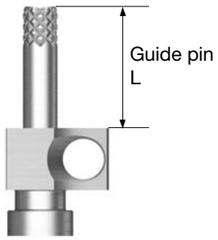

D \ L	Hex	Non-Hex	Guide Pin 5	10	12	15
ø 4.8/ø 4.8	MSR200	MSR100	GP100	GP150*	GP170	GP200
ø 5.5/ø 5.5 PS	MSW200	MSW100	GPW100	GPW150*	-	-

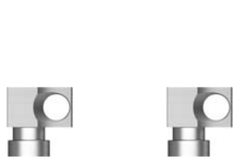

Esthetic-low Transfer Impression Coping

- Transfer impression coping for esthetic-low abutment
- Use a 1.2 hex driver (fastened manually)

M Mini
R Regular
W Wide

D \ H	8.0
ø 4.8/ø 4.8	MTTR100
ø 5.5/ø 5.5 PS	MTTW100

Esthetic-low Lab Analog

- Lab analog for esthetic-low abutment
- Use a 1.2 hex driver (fastened manually)

M Mini
R Regular
W Wide

D	
ø 4.8/ø 4.8	MERR300
ø 5.5/ø 5.5 PS	MERW300

Esthetic-low Polishing Protector

- Protects GoldCast/plastic cylinder joints during polishing process
- Use a 1.2 hex driver (torque manually)

M Mini
R Regular
W Wide

D	
ø 4.8/ø 4.8	MPCR100
ø 5.5/ø 5.5 PS	MPCW100

Multi Angled Abutment

- Used in the manufacture of screw retained prosthesis in multiple cases
- It compensates the angle of the fixture up to 108°
- The same platform as esthetic low abutment
- Prosthetics production with US esthetic low cylinder (regular/non-hex)
- Use dedicated abutment screw
- Use of 1.2 hex driver
- Recommended tightening torque : 20Ncm(mini), 30Ncm(regular)
- Packing unit : abutment + Ti screw

Abutment + Ti screw order code
: product code + **TH** (ex : US17MAR4830**TH**)

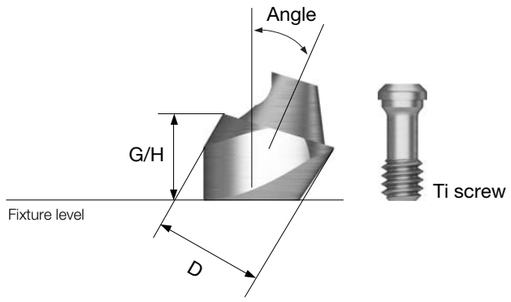

D ø4.8

M

Ti screw
: USMABSM

H/G	2.0	3.0	4.0	3.0	4.0	5.0
Angle		17°			30°	
						
	US17MAM**4820**	US17MAM**4830**	-	-	-	-

D ø4.8

R

Ti screw
: USMABSR

H/G	2.0	3.0	4.0	3.0	4.0	5.0
Angle		17°			30°	
						
	US17MAR**4820**	US17MAR**4830**	US17MAR**4840**	US30MAR**4830**	US30MAR**4840**	US30MAR**4850**

PROSTHETIC FLOW DIAGRAM 3

O-ring / Locator®

Overdenture

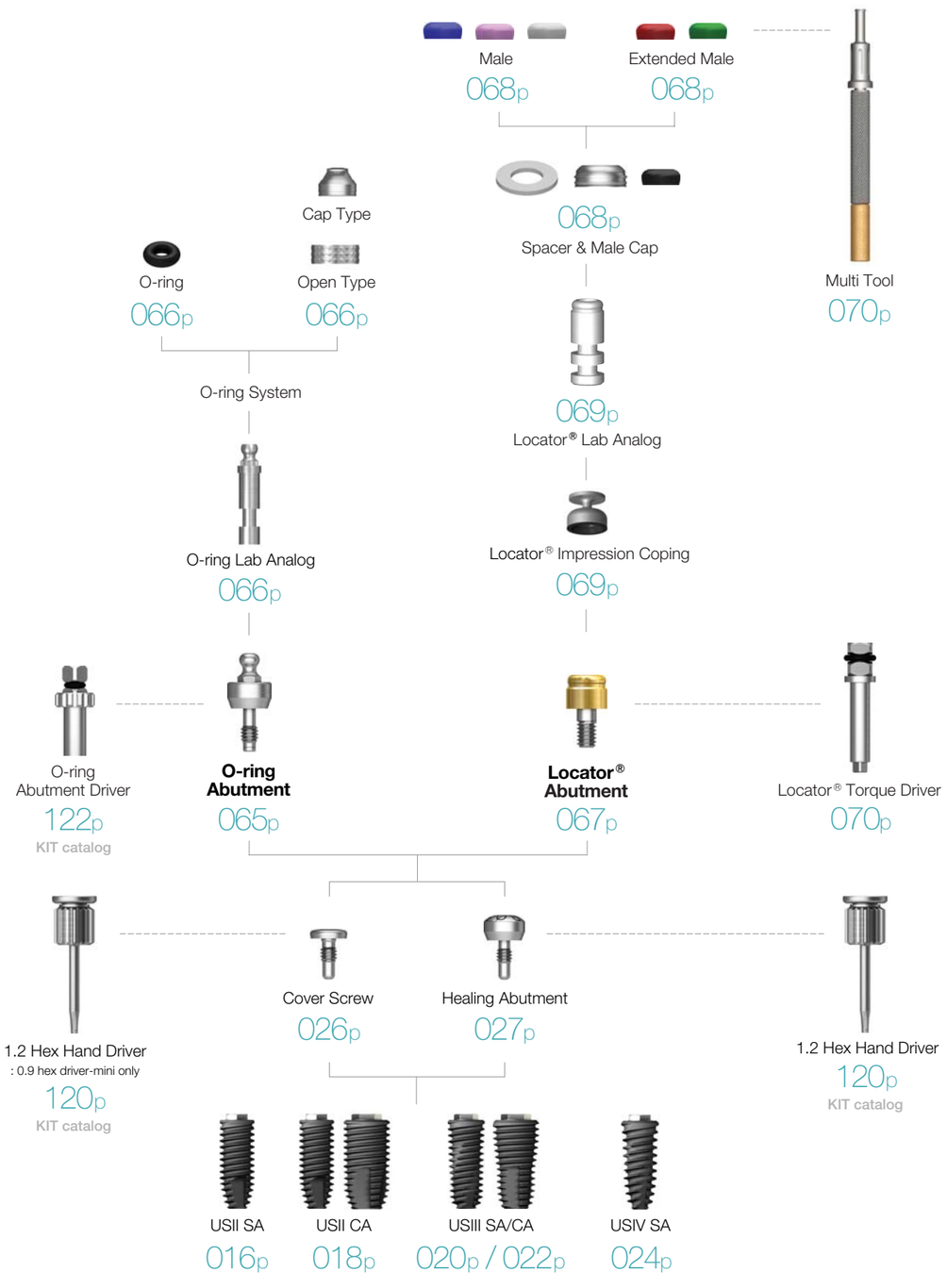

O-ring Abutment

- Retains overdentures with an o-ring system
- Angle compensation of up to 20˚
- Torque using a dedicated outer driver (code : AORD)
- Recommended tightening torque : 30Ncm

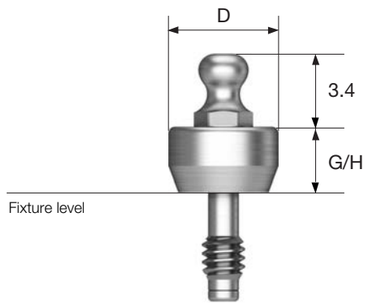

D ø5.0

R

G/H	2.0	3.0	4.0	5.0	6.0
	OAA200	OAA300	OAA400	OAA500	OAA600

D ø5.6

W

G/H	2.0	3.0	4.0	5.0	6.0
	OAAW200	OAAW300	OAAW400	OAAW500	OAAW600

O-ring Abutment Components

O-ring Retainer Cap Set

- O-ring housing
- Place appropriate o-ring in the metal housing before connecting to the abutment
- Packing unit : retainer cap + o-ring

RCS01

O-ring Retainer Set

- Used when vertical dimension is shorter than the retainer cap
- Packing unit : retainer cap + o-ring

RS01

O-ring Set

- O-ring set
- Packing unit : o-ring x 5ea

OAON01S

O-ring Lab Analog

- Lab analog for o-ring abutment

OAL

Locator® Abutment

- Genuine zest anchors abutment
- Angle compensation of up to 40˚
- 1.5mm lower profile, attachment with various and stable retention forces
- Torque using a dedicated outer driver (code : TWLDLK/TWLDLSK)
- Recommended tightening torque : 30Ncm

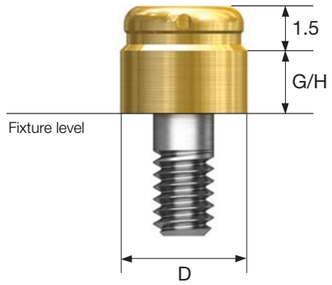

D ø3.5

M

G/H	1.0	2.0	3.0	4.0	5.0
	HULCA**3510M**	HULCA**3520M**	HULCA**3530M**	HULCA**3540M**	HULCA**3550M**

D ø4.1

R

G/H	1.0	2.0	3.0	4.0	5.0
	HULCA**4010R**	HULCA**4020R**	HULCA**4030R**	HULCA**4040R**	HULCA**4050R**

D ø5.0

W

G/H	1.0	2.0	3.0	4.0	5.0
	HULCA**5010W**	HULCA**5020W**	HULCA**5030W**	HULCA**5040W**	HULCA**5050W**

Locator® Abutment Components

Locator® Male Processing Kit

- **Components**
  - Block out spacer / denture cap connected to black processing male
  - Replacement male blue/pink/clear
- A full range of retentive males are included with each denture cap to allow personalized retention for each specific patient
- Locator core tool places and removes nylon retentive males
- Packing unit : 2set

LMPS

Locator® Replacement Male

- Retention force : approx. 6N
- Angle compensation of up to 20˚
- Packing unit : 4ea

LRM06S

- Retention force : approx. 12N
- Angle compensation of up to 20˚
- Packing unit : 4ea

LRM12S

- Retention force : approx. 22N
- Angle compensation of up to 20˚
- Packing unit : 4ea

LRM22S

Locator® Extended Replacement Male

- Retention force : approx. 6N
- Angle compensation from 20~40˚
- Packing unit : 4ea

LEM06S

- Retention force : approx. 12N
- Angle compensation from 20~40˚
- Packing unit : 4ea

LEM12S

Locator® Black Processing Male

- A nylon male used in prosthesis fabrication process
- Packing unit : 4ea

LBPS

Locator® Block Out Spacers

- Place block-out spacers on the heads of the locator abutments. Position denture cap with integrated black processing onto the locator abutments. If necessary, add additional block-out spacers until no gap is visible between female, block-out spacer and gum.
- Packing unit : 20ea

LBSS

Locator® Impression Coping

- A pick up impression coping
- Closed tray is used
- Packing unit : 4ea

LICS

Locator® Lab Analog

- A lab analog for locator abutment
- Packing unit : 4ea

LAL40S

Locator® Abutment Components

Locator® Core Tool

- Places and removes nylon retentive males in the denture cap
- Separated into three different tools, includes a hand driver for locator abutment

LCCT

Locator® Torque Driver

- Torque driver

Type	Short	Long
		
	TWLD**SK**	TWLD**LK**

OneSeal

OneSeal

- Disposable medical devices for internal filling of superstructure
- Cut to desired length (medical silicone)
- Packing unit : long 5ea

D	H	50
	Type	Long
ø3.0		USSE**3050S**

Instructions for Use (AUG. 2017, Ver. 5.5)

Description of Osstem implant system

Osstem Implant is a brand for implant materials for dental practices, and the fixture is made mainly of titanium. The abutment, prosthetic components and tools for the Osstem Implant system are compatible with the Osstem Implant fixture only. Using this product in combination with products from other manufacturers may cause various problems including loosening and fracture due to incomplete locking and compatibility issues. Refer to the manual or the catalogue or our website (www.osstem.com) for details. See the product label for the product code, specifications, manufacturing date, and expiration date.

Sterility

The fixture, cover screw, and healing abutment are cleansed and sterilized with gamma radiation. This product is a disposable sterilized medical device intended for one-time use. In order to prevent contamination or infection of the product or operated site, the product must be used using a sterilized instrument in a sterilized environment. Damaged products, products with open packaging, or expired products must be discarded due to potential risks of contamination, infection, or osseointegration failure. Re-sterilization or re-use of the product may result in infection, osseointegration failure, or implant damage due to reduced accuracy.

Storage condition

Keep the product in a dry place at room temperature(1~30℃). Keep away from direct sunlight.

General precautions

The surgical technology of dental implant involves an expert, complex procedure. Formal training is required to perform implant surgery. Careful considerations must be made before the operation in case of bone disorders (osteoporosis, osteomalacia) or metabolic disorders of the bone.

Precautions

Determine the local anatomy and suitability of the available bone for implant placement. Prepare the implant considering the expected situations and cautions. Excessive occlusal load may cause loosening or fracture of an implant. In order to avoid this condition, the implant must be placed in accurate location and direction considering the relationship between the implant and opposing dentition. Visual inspection as well as panoramic and periapical radiographs are essential to determine anatomical landmarks, occlusal conditions, periodontal status, and the adequacy of the bone. Adequate radiographs, direct palpation, and visual inspection of the implant site are necessary prior to implant surgery.

Procedural precautions

Osstem Implant System is for single and two stage surgical procedures. As much as possible, try to minimize damage to the cell tissue and surgical trauma, pay special attention to maintaining the temperature at the implant site and removal of the source of contamination and infection. All drills and taps must be sufficiently and continuously irrigated for cooling during use. Implant placement should be accomplished at very low speed (25-30 rpm) or manually. Excessive torque (greater than 55Ncm) in the fixture placement can have adverse effects such as partial fracture or necrosis of the bone. Placing an implant tilted by 30° or higher is not recommended due to possible fracture of implant. Immediate loading to the fixture right after the surgery should be avoided. The bone quality and initial stability after fixture placement are important elements in determining the appropriate loading time. Mini-diameter implant or implant with diameter of 4.0 or less and which integrates with angled abutment may be fractured due to limitations of structural rigidity. They are not recommended for use in a posterior area. The Ultra-Wide fixtures are intended to be used only to replace molar teeth and that angled abutments are not to be used with the Ultra-Wide fixtures. Evaluate the quantity of bone and radiographs to assess any potential anatomical contraindications to use of the Ultra-Wide fixture. For the placement of the Short Implant (diameter is 5mm or more and length is shorter than 7mm) which is used on the molar region only, clinicians should closely examine the patients for any of the following conditions: 1) periimplant bone loss, 2) changes to implant's response to percussion, 3) radiographic changes in bone to implant contact along the implant's length. If a short implant shows mobility or greater than 50% bone loss, the implant should be considered for possible removal. And clinicians should consider a two-stage surgical approach, splinting a short implant to an additional implant, and placement of the widest possible fixture. Allow longer healing periods for osseointegration before fabrication of the prosthesis and avoid immediate loading. Products with diameter of 3.25mm or less must be used exclusively for mandibular anterior teeth in order to prevent fracture due to excessive occlusal load. It is recommended that you should avoid applying HA coated fixture to hard bone, and the insertion torque of the implant should be less than 35Ncm, because cracks or damages might occur in the coated layer during implant placement. The surfaces of CA and SOI have the same physical shape as the SA surface made through blasting and etching treatments. After the SA surface treatment, to prevent the products' exposure to the atmosphere, CA is stored in solution, whereas SOI is stored in water-film coating form; it is designed to maintain the chemically activated state of the SA surface. Thus, CA or SOI products should be implanted in the target region at least within 15 minutes of taking them out of the container.

Warning

The selection of inappropriate patients and surgical methods can cause implant failure or loss of bone supporting the implant. Osstem implants must not be used for purposes other than the recommended use and must not be remodeled. Implant mobility, bone loss, and chronic infection can result in failure of the implant surgery.

Indications for use

The Osstem Implant System is an artificial dental root that has been designed for use in dental implant treatment in order to recover lost teeth. The system is implanted via a surgical method in maxillary or mandibular bone to replace natural dental root. The Osstem Implant System is indicated for use in partially or fully edentulous mandibles and maxillae, in support of single or multiple-units restorations including; cemented retained, screw retained, or overdenture restorations, and final or temporary abutment support for fixed bridgework. It is intended for delayed loading. Products with diameter of 3.25mm or less must be used exclusively for mandibular anterior teeth in order to prevent fracture due to excessive occlusal load.

Side effects

A few problems may occur after the operation (loss of implant stability, damage of prosthesis, etc.). Deficient quality and quantity of the remaining bone, infection, allergic reaction, inferior oral hygiene or uncooperativeness of patient, implant mobility, partial deterioration of tissue, and improper position or arrangement of implants may cause the above mentioned problems.

Contraindications

Contraindications include the following, but are not limited to:

- Patients with hemophilia or difficulties related to bone or wound treatment
- Patients with uncontrollable diabetes, heavy smoker or alcoholic
- Patients whose immunity system is inactive due to chemical therapy or radiation therapy
- Patients with oral infection or inflammation (improper oral hygiene, bruxism)
- Patients with untreatable occlusion/joint disorder, insufficient dental arch space
- Any patient who is not suitable for an surgery

Manufacturer : Osstem Implant Co., Ltd.
203, Geoje-daero, Yeonje-gu, Busan, Korea
TEL 82-51-850-2500 **FAX** 82-51-861-4693

EC REP

DEUTSCHE OSSTEM GmbH.
Mergenthalerallee 25
65760 Eschborn, Germany
+49-(0)6196-777-550

Storage condition

Dry place at room temperature

Rx only

For USA only : Federal law restricts this device to sale by or on the order of a dentist

CE 2460

STERILE R — Sterilized using irradiation

Use by

Manufacture

Do not reuse

Date of manufacture

Keep away from sunlight

REF — Catalogue number

NON STERILE — Non-Sterile

Keep dry

LOT — Batch code

STERILIZE — Do not resterilize

Caution, Consult accompanying documents

OSSTEM IMPLANT

OSSTEM
IMPLANT