CEO's Message

"Cutting edge technology and superior quality"

Making products that dentists are able to trust and are satisfied with:
This is our mission at OSSTEM IMPLANT

We are forever grateful to all of our customers for their unwavering support to OSSTEM IMPLANT

Osstem, South Korea's first implant manufacturer, has achieved steady growth thanks to the support and love from its customers. Osstem has put a lot of effort into continuous investment in R&D and quality innovation in order to provide products that customers are looking for and satisfied with. Based on this, it has become the No. 1 implant company in Asia Pacific region and No. 4 in the world. Moreover, it was ranked No. 1 for global fixture sales from 2017 to 2019 for 3 consecutive years and became the global provider of the implants most used by the customers all around the world.

In this 2020-21 product catalog, you can see a variety of products at a glance, including not only the implant products of Osstem's differentiated technology but also the digital dentistry products such as Oneguide the implant surgical guide, scanners, milling machines, CAD/CAM, etc.
We have invested numerous efforts and time in the configuration and design of this catalog so that customers do not have any inconvenience of finding and ordering the products they need. The fixtures and abutments are listed to make it easy to understand the diameter, length, and functional behavior, in sequence that customers make a judgement for purchase.

The product type and code are displayed to help with accurate ordering. We have added the product thumbnail pages to view the components at a glance and detailed information pages to describe the functions of each component for enhanced user understanding. For GBR products, shape, size, and capacity of each product are described in detail for easy ordering as well. In addition, the release date and time are indicated for all products so that customers can easily distinguish new products from existing products for purchase.
In terms of design, we applied high-quality product images to aid ordering without looking at the actual product, and improved user convenience by applying representative colors to facilitate classification by product category.

We hope that this 2020-21 product catalog will help you effectively find and purchase all the products you need for your dental practice. Osstem Implant will continue to strive to create greater customer value as a partner to help dentists provide better care. Thank you.

CEO of OSSTEM IMPLANT
Tae-Kwan Eom

Worldwide & History

EMEA

GERMANY	ITALY
RUSSIA	CROATIA
UKRAINE	GREECE
FRANCE	LATVIA
HUNGARY	ESTONIA
SWITZERLAND	LEBANON
NORWAY	TUNISI
FINLAND	MACEDONIA
UK	SLOVENIA
POLAND	KOSOVO
ROMANIA	BULGARIA
CZECH	GEORGIA
SLOVAKIA	EGYPT
SERVIA	SOUTH AFRICA
PORTUGAL	ALBANIA
SPAIN	TAJIKISTAN

ASIA / OCEANIA

KOREA	AUSTRALIA
JAPAN	NEW ZEALAND
CHINA	TURKEY
CHINESE TAIPEI	PAKISTAN
VIETNAM	KUWAIT
BANGLADESH	U.A.E
HONG KONG, CHINA	SAUDI
MONGOLIA	IRAN
MALAYSIA	CAMBODIA
SINGAPORE	PAPUA NEW GUINEA
INDIA	MYANMAR
PHILIPPINES	SRI LANKA
THAILAND	OMAN
INDONESIA	JORDAN
KAZAKHSTAN	PALESTINE
UZBEKISTAN	

N/S.AMERICA

CANADA	COSTA RICA
USA	PERU
MEXICO	BRAZIL
CHILE	

1997
- 01 Established Osstem(D&D System)
- 12 Launched "Doobunae"(health insurance claiming software)

2000
- 06 Developed and launched "Hanaro" (total dental clinic management software)
- 12 Acquired Sumin Comprehensive Dental Materials (South Korea's fist implant manufacturer)

2001
- 01 Obtained CE-0434 certification
- 03 Established AIC Training Center

2002
- 01 Established Osstem Implant Research Center
- 08 Obtained US FDA certification

2003
- 07 Established the Information System Research Institute

2006
- 03 Changed company name to Osstem Implant Co., Ltd.
- 09 Established a subsidiary in the U.S. (HIOSSEN), and set up the manufacturing facility
- 12 Completed the first-phase establishment of overseas subsidiaries (12 countries)

2007
- 02 Listed on KOSDAQ and began trading
- 11 Won the "10 Million Dollar Export Tower" on Trade Day

2008
- 01 Established Osstem Bone Science Research Institute
- 07 Won the Grand Prize of the 2008 Korea Health Industry Awards by the Ministry of Health, Welfare and Family Affairs

2010
- 03 Launched TSIII SA implant
- 06 Launched TSIII HA implant

2011
- 06 Osstem Implant Research Institute selected as an Advanced Technology Center (ATC) by the Ministry of Trade, Industry and Energy
- 07 Selected as 2011 World Champ company by KOTRA
- 12 Selected as Current World-Class Product by the Ministry of Knowledge Economy

2012
- 06 Launched TSIII CA implant
- 07 Established the Medical Equipment Research Institute

2013
- 01 Launched xenograft "A-Oss"
- 09 Launched "K3 unit chair"

2014
- 05 Launched impression material "Hysil"
- 08 Launched whitening material "BeauTis"

2015
- 03 Established Osstem Pharma Co., Ltd.
- 12 Awarded the "50 Million Dollar Export Tower" on Trade Day

2016
- 01 Established VUSSEN Co., Ltd.
- 02 Released TSIII BA
- 03 Acquired Cardiotec Co., Ltd.
- 04 Launched the dental clinic interior design business
- 06 Released TSIII SOI
- 08 Acquired Hubit Co., Ltd.
- 11 Launched "OneGuide"

2017
- 12 Won the Presidential Award at 2017 Government Commendation for Job Creation

2018
- 11 Won the '2018 SW Enterprise Quality Award' by Ministry of Science and Technology
- 12 Won the "100 Million Dollar Export Tower" on Trade Day

2019
- 08 Opened manufacturing corporation in Yancheng, China
- 10 Established a subsidiary in Brazil (23 subsidiaries in 26 countries in operation)
- 12 Awarded the Brand Top, Industrial Service, Presidential Citation, Prime Minister Citation, and KITA Citation on 56th Trade Day

2020
- 01 Launched "OneClick" the electronic chart for dental clinics
- 02 Established "DenAll", the comprehensive dental portal
- 07 Headquarters relocated to Magok, Seoul
- 08 No.1 seller of fixture for 3 consecutive years (2017~2019)

OSSTEM Implant Design feature

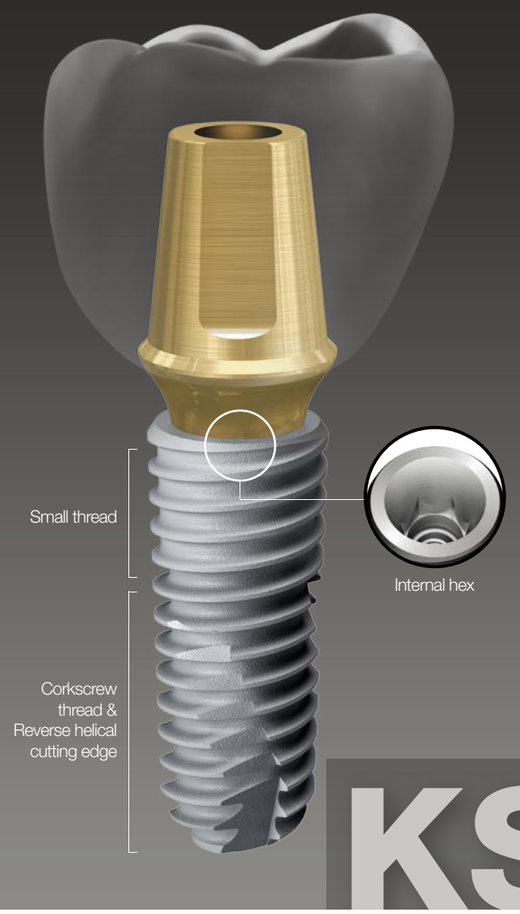

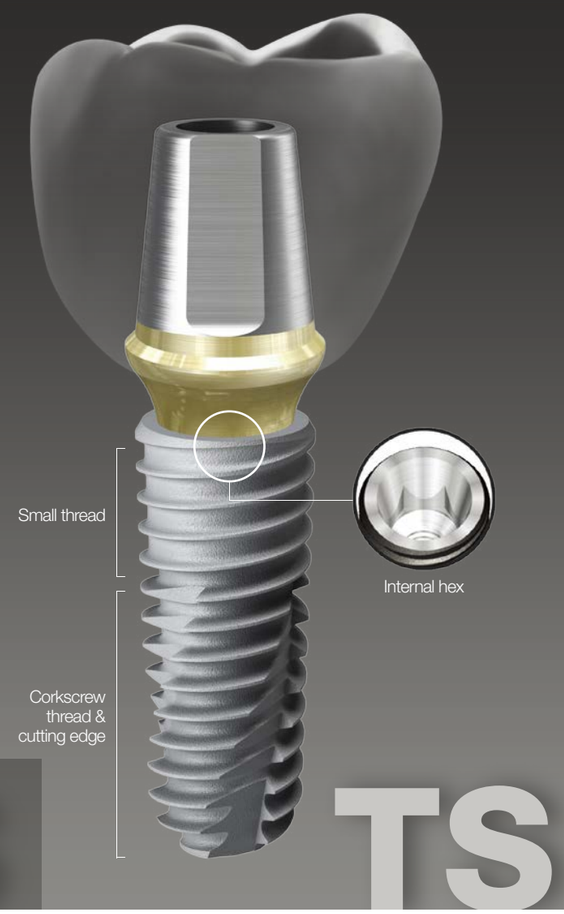

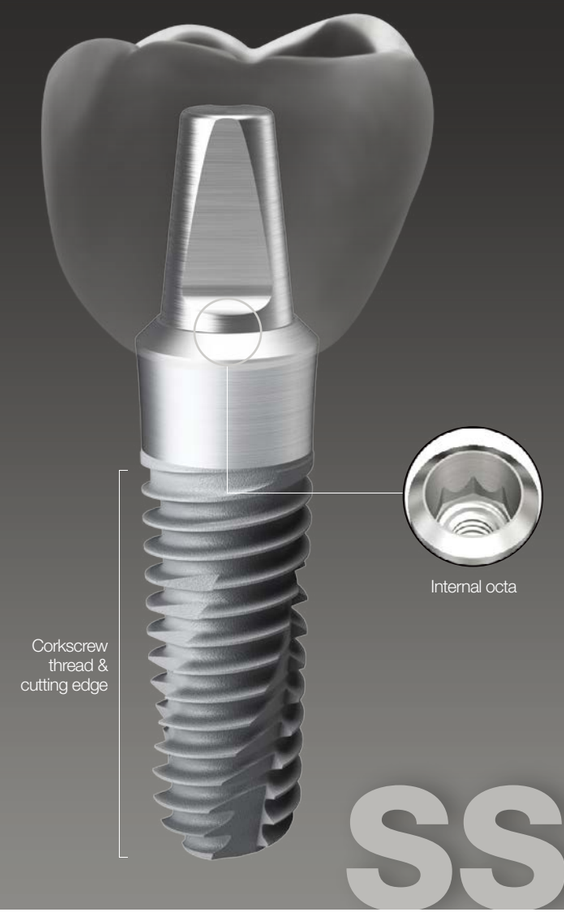

Next-generation submerged type implant with an Internal hex 15° tapered connection structure

- Connection - Regular only (2.1hex single platform)
  - Strength intensified due to a narrower and deeper connection
  - Reduced prosthetic errors and inventory burden with no variation of the product (Mini/Regular)
- Abutment holding system applied to enable screw fastening with one hand
- Excellent initial stability in soft bone with smaller threads in the upper section
- Corkscrew thread & cutting edge
  - Superior self-threading effect for easy placement path adjustment
  - Enhanced initial stability in soft bone and consistent placement torque according to the drill diameter
- Available surface types - BA

Submerged type implant with an internal hex 11° tapered connection structure

- Connection - Mini / Regular
- Excellent initial stability in soft bone with smaller threads in the upper section
- Corkscrew thread & cutting edge
  - Superior self-threading effect for easy placement path adjustment
  - Enhanced initial stability in soft bone and consistent placement torque according to the drill diameter
- Various body shape options available to match the patient's bone quality and clinical condition
  - TSII (straight body) : Easy to adjust placement depth
  - TSIII (1.5° tapered body) : Excellent initial stability needed for immediate loading even in soft bone
  - TSIV (6° tapered body) : Specifically designed for use in maxillary sinus and soft bone, providing excellent initial stability
- Available surface types - SA / CA / BA / SOI

Non-submerged type implant with an internal octa 8° tapered connection based on 1st stage surgery

- Connection - Regular / Wide
- Corkscrew thread & cutting edge
  - Superior self-threading effect for easy placement path adjustment
  - Enhanced initial stability in soft bone and consistent placement torque according to the drill diameter
- Various body shape options available to match the patient's bone quality and clinical condition
  - SSII (straight body) : Easy to adjust placement depth
  - SSIII (1.5° tapered body) : Excellent initial stability needed for immediate loading even in soft bone
- Available surface types - SA / CA / BA

Submerged type implant with an external hex connection structure

- Connection - Mini / Regular / Wide / Wide PS
- Corkscrew thread & cutting edge
  - Superior self-threading effect for easy placement path adjustment
  - Enhanced initial stability in soft bone and consistent placement torque according to the drill diameter
- Various body shape options available to match the patient's bone quality and clinical condition
  - USII (straight body) : Easy to adjust placement depth
  - USIII (1.5° taper body) : Excellent initial stability needed for immediate loading even in soft bone
  - USIV (6° taper body) : Specifically designed for use in maxillary sinus and soft bone, providing excellent initial stability
- Available surface types - SA / CA / BA / SOI

OSSTEM Implant Surface feature

The key factor in providing implant treatment safely and efficiently is surface technology.
OSSTEM IMPLANT proudly presents its cutting-edge surface technology

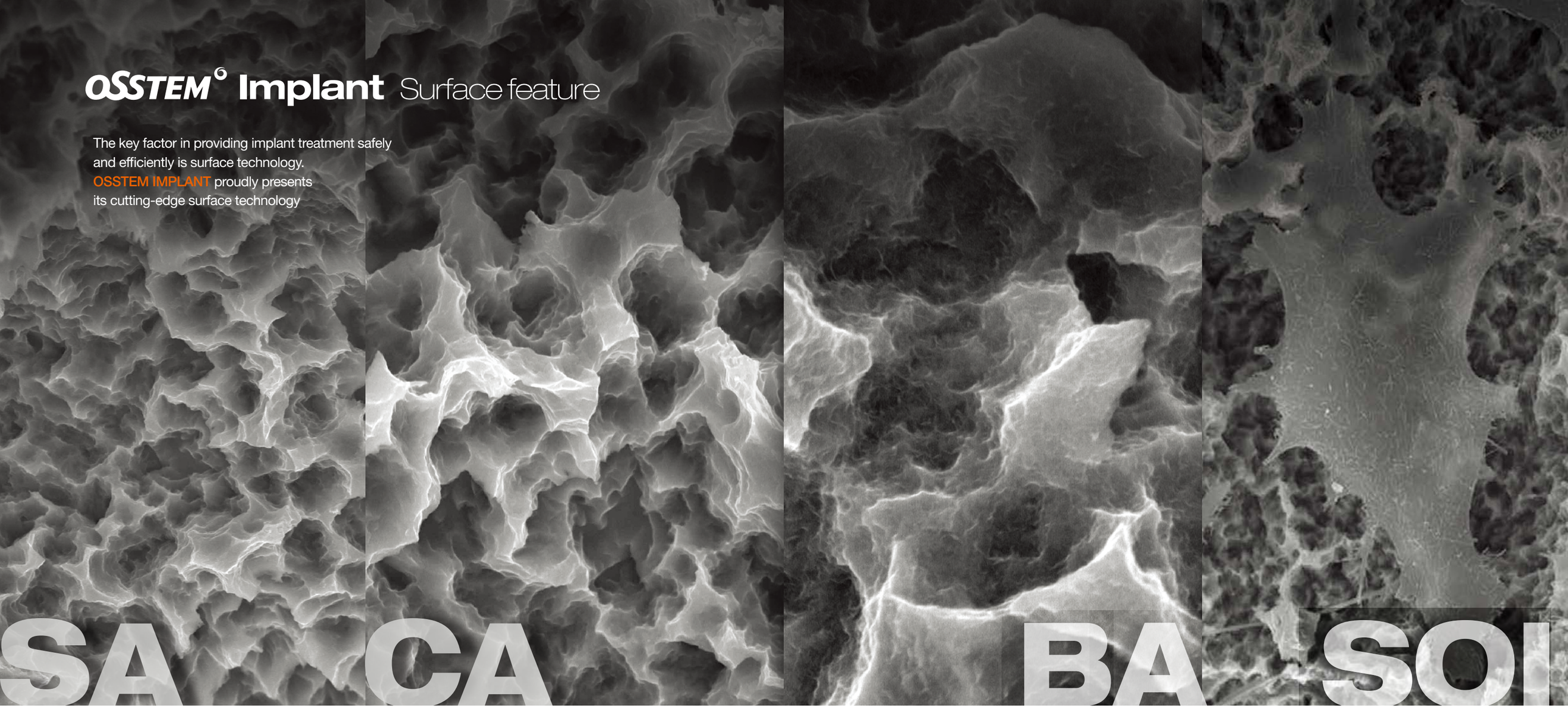

Optimized Surface through Acid Treatment

- Ra 2.0~3.0㎛ surface roughness (Note : The roughness in the upper 0.5mm part is Ra 0.5~0.6㎛)
- Consistent surface micro-pits of 1~3㎛
- Surface area increased by 46% compared to RBM treated implants

In-vitro and In-vivo Bone Response

- Osteoblast differentiation and ossification improved by 20% compared to RBM treated implants
- Initial bone reaction performance in big animal model (mini-pig)
  - Initial stability (RT, 4 weeks) improved by 48% compared to RBM treated implants
  - Ossification (BIC, 4 weeks) improved by 20% compared to RBM treated implants

Super-hydrophilic SA surface immersed in a calcium solution

- Same surface morphology as SA surfaces
- Surface reaction activated by immersing in a calcium solution (CaCl2)
- Increased new bone formation area with excellent blood wettability
- Bone response improved in early osseointegration stage compared to standard SA surface

In-vitro and In-vivo Bone Response

- Protein and cellular adhesion tripled compared to SA surfaces
- Initial cellular differentiation (7 days) improved by 19% compared to SA surfaces
- Initial stability (RT, 4 weeks) improved by 34% compared to SA surfaces
- Ossification (BIC, 4 weeks) improved by 26% compared to SA surfaces

Premium low crystalline nano-HA coated SA surface

- 10nm ultra-thin HA coating
- SA surface (Ra 2.0~3.011㎛) coated with HA
- Dual functions of titanium and HA
  - HA is naturally resorbed during ossification

In-vitro and In-vivo Bone Response

- Advantages of both SA and HA surfaces
  - SA's ability to maintain an optimal surface
  - HA's ability to form high quality initial bone even in bone of poor quality
- Ossification (BIC) improved by 26% compared to SA surfaces
- Applicable to all types of bone quality

Next-generation surface with hemostatic effect and pH control feature

- Activation of blood clot formation
- Prevention of carbon adsorption in air
- Same surface roughness (Ra 2.0~3.0㎛) as SA surfaces
- Superior blood wettability with super hydrophilic surface

In-vitro and In-vivo Bone Response

- Protein and cellular adhesion increased by 130 times compared to SA surfaces
- Initial stability (RT, 4 weeks improved by 57% compared to SA surfaces
- Surface with the shortest duration of treatment

KS SYSTEM Contents

OSSTEM IMPLANT

KS SYSTEM

FIXTURE

COMPONENTS

KS Design & Surface Feature

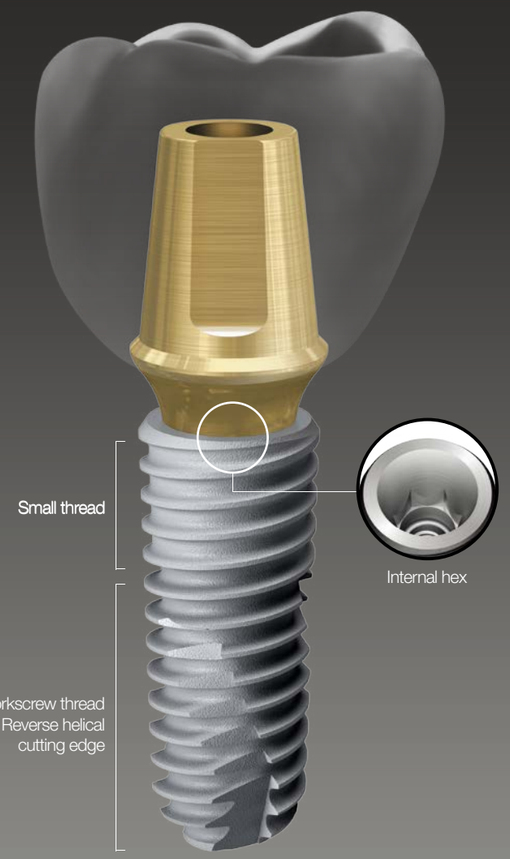

KS

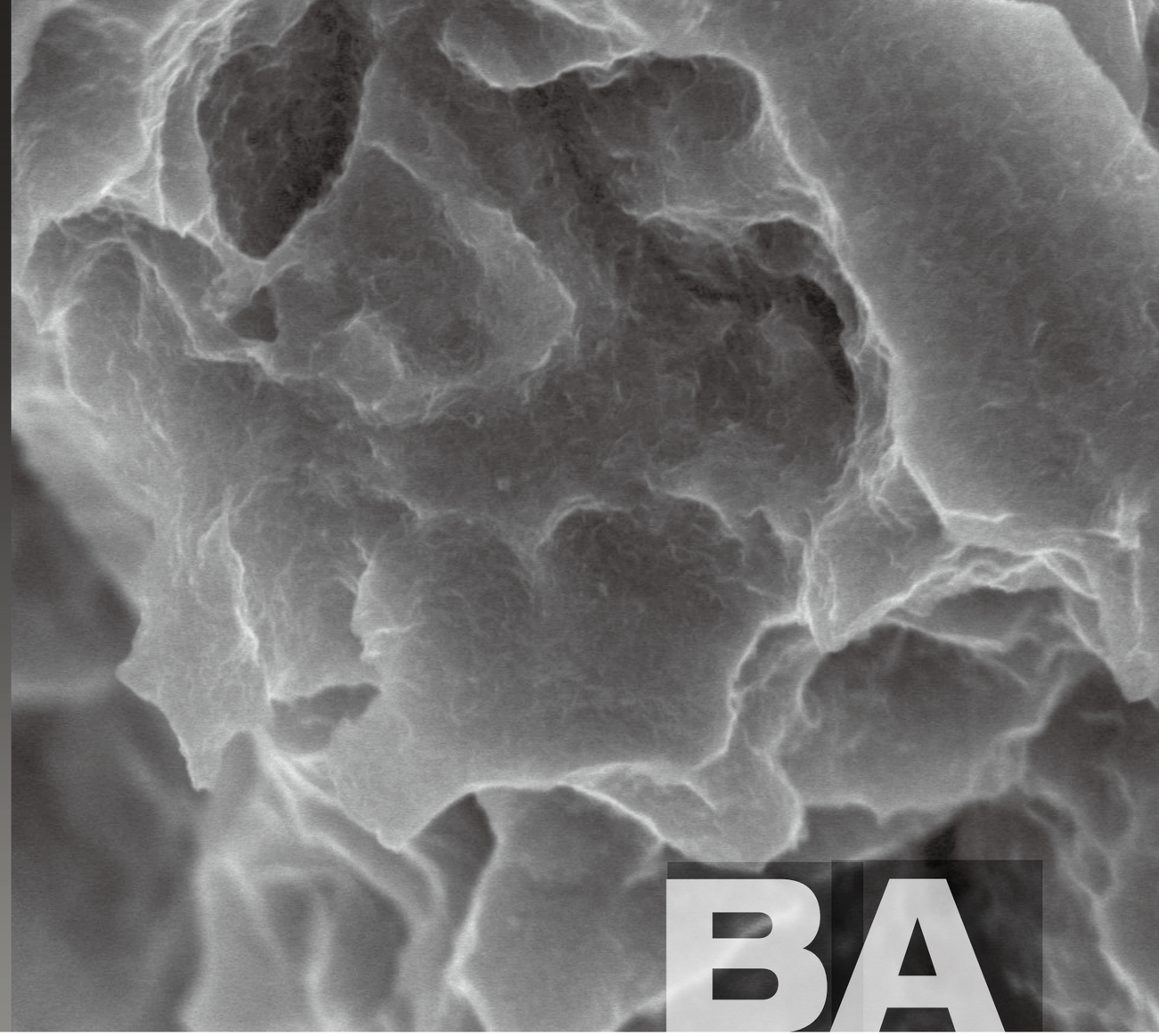

BA

KS packaging color information

Next-generation submerged type implant with an Internal hex 15° tapered connection structure

- Connection - Regular only (2.1 hex single platform)
  - Strength intensified due to a narrower and deeper connection
  - Reduced prosthetic errors and inventory burden with no variation of the product (Mini/Regular)
- Abutment holding system applied to enable screw fastening with one hand
- Excellent initial stability in soft bone with smaller threads in the upper section
- Corkscrew thread & cutting edge
  - Superior self-threading effect for easy insertion path adjustment
  - Enhanced initial stability in soft bone and consistent placement torque according to the drill diameter
- Available surface types - BA

Premium low crystalline nano-HA coated SA surface

· 10nm Ultra-thin HA coating
· SA surface (Ra 2.0-3.011㎛) coated with HA
· Dual functions of titanium and HA
  - HA is naturally resorbed during ossification

In-vitro and In-vivo Bone Response

· Advantages of both SA and HA surfaces
  - SA's ability to maintain an optimal surface
  - HA's ability to form high quality initial bone even in bone of poor quality
· Ossification (BIC) improved by 26% compared to SA surfaces
· Applicable to all types of bone quality

KSIII BA Fixture 10.2019

- Next-generation submerged type implant with an Internal hex 15° tapered connection structure
- Connection : Regular only (2.1 hex single platform)
  - Strength intensified due to a narrower and deeper connection
  - Reduced prosthetic errors and inventory burden with no variation of the product (Mini/Regular)
- Abutment holding system applied to enable screw fastening with one hand
- Excellent initial stability in soft bone with smaller threads in the upper section
- Corkscrew thread & cutting edge
  - Superior self-threading effect for easy placement path adjustment
  - Enhanced initial stability in soft bone and consistent placement torque according to the drill diameter
- Recommended placement torque : ≤40Ncm

※ Fixtures with a diameter of 4.5mm or greater are recommended for the posterior region

NoMount Fixture (fixture + cover screw) order code
: **C** + fixture product code (ex : **C**KS3S4010B)

Pre-Mounted Fixture (fixture + mount + cover screw) order code
: **B** + fixture product code (ex : **B**KS3S4010B)

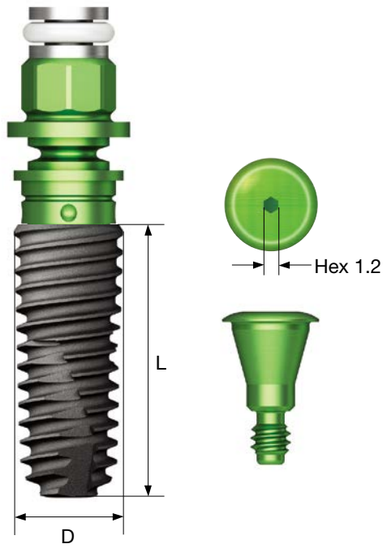

D ø3.5
Hex 2.1

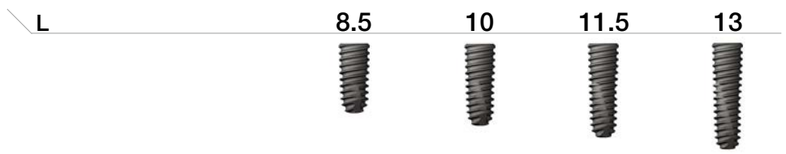

KS3S**3508B** KS3S**3510B** KS3S**3511B** KS3S**3513B**

D ø4.0
Hex 2.1

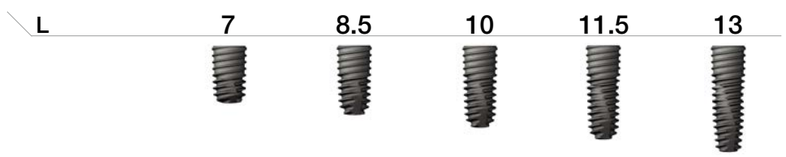

KS3S**4007B** KS3S**4008B** KS3S**4010B** KS3S**4011B** KS3S**4013B**

D ø4.5
Hex 2.1

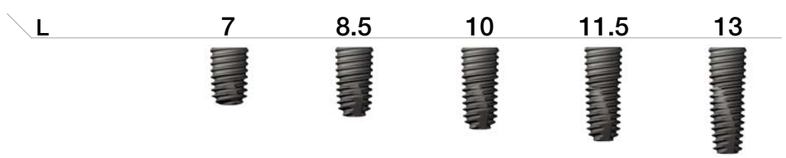

KS3S**4507B** KS3S**4508B** KS3S**4510B** KS3S**4511B** KS3S**4513B**

D ø5.0
Hex 2.1

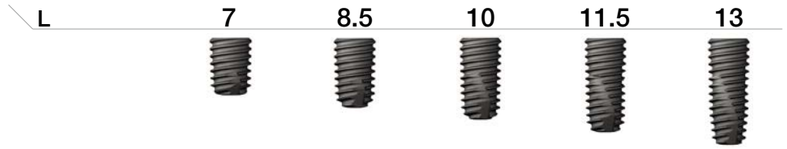

KS3S**5007B** KS3S**5008B** KS3S**5010B** KS3S**5011B** KS3S**5013B**

Distinction of TS and KS on radiographs

If the empty space at the bottom of the abutment coincides with the beginning of the small thread, it is KS.

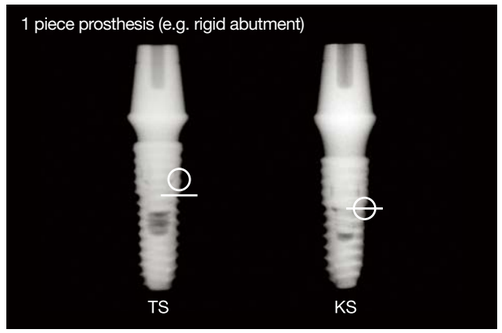

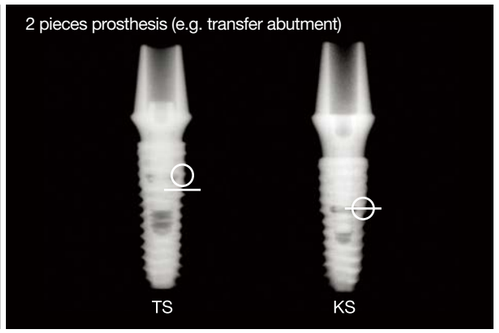

Nominal diameter may differ from actual diameter.

Mount & Screw

Simple Mount

- Hex driver : 1.2
- Recommended tightening torque : 8~10Ncm
- Dedicated simple mount used for Ø3.5 fixture
- Packing unit : Mount + Mount Screw

※ Disposable, Do not reuse

For
Ø3.5

KSSA**MM**

KSSA**MR**

Cover Screw

- Height (H) selected according to the depth of fixture placement
- Dedicated cover screw used for Ø3.5 fixture
- Hand tightened with 1.2 hex driver

For
Ø3.5

Healing Abutment

- Hand tightened with 1.2 hex driver
- G/H height raised by 0.5mm for Ø3.5 fixture with the abutment tightened

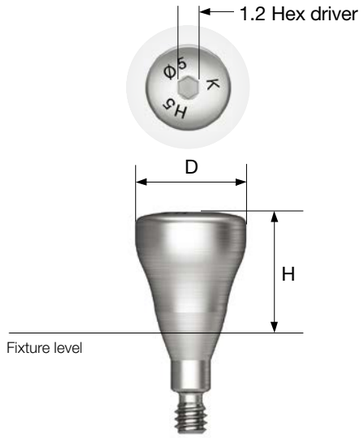

Matching table

Healing abutment	**H**	3.0	4.0	5.0	7.0
Abutment	**G/H**	1.0	2.0 or 3.0	3.0 or 4.0	5.0 and above
Impression coping	**Type**	Short	Short	Long	Long

Ø4.0

KSHA**403** KSHA**404** KSHA**405** KSHA**406** KSHA**407** KSHA**409**

Ø4.5

KSHA**453** KSHA**454** KSHA**455** KSHA**456** KSHA**457** KSHA**459**

Healing Abutment

D \ H	3.0	4.0	5.0	6.0	7.0	9.0
ø5.0	KSHA503	KSHA504	KSHA505	KSHA506	KSHA507	KSHA509

D \ H	3.0	4.0	5.0	6.0	7.0	9.0
ø6.0	KSHA603	KSHA604	KSHA605	KSHA606	KSHA607	KSHA609

D \ H	3.0	4.0	5.0	6.0	7.0	9.0
ø7.0	KSHA703	KSHA704	KSHA705	KSHA706	KSHA707	KSHA709

D \ H	3.0	4.0	5.0	6.0	7.0	9.0
ø8.0	-	-	KSHA805	-	-	-

PROSTHETIC FLOW DIAGRAM 1

Rigid / Transfer

Abutment Level Impression

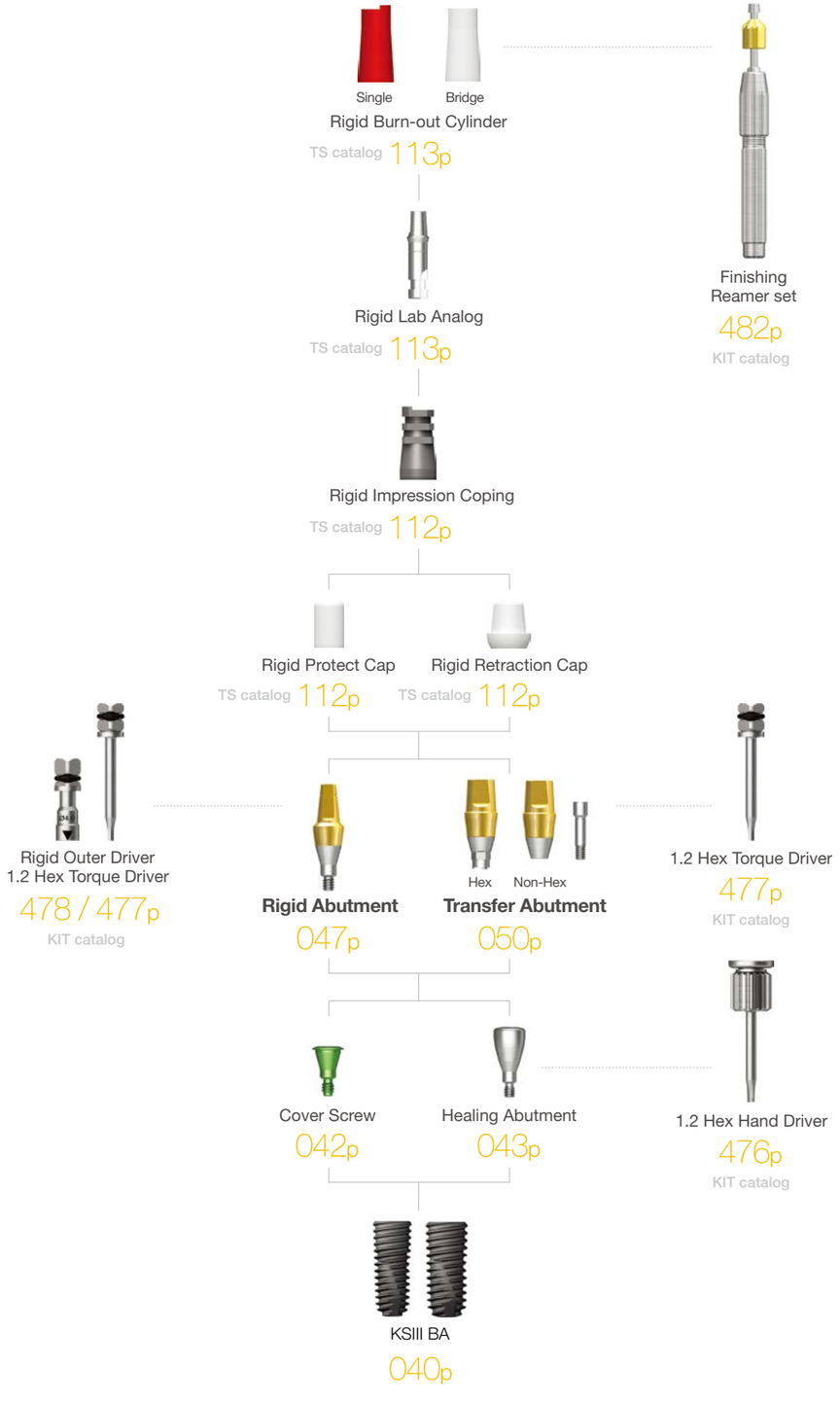

Rigid Abutment

- Abutment for producing cement-retained prosthesis
- Abutment level impression
- Ø4.0 : tightened with outer driver (code : ORDML/ORDMS)
- Ø4.5/5.0/6.0 : tightened with outer driver or 1.2 hex driver
- Ø7.0: tightened with 1.2 hex driver
- G/H height raised by 0.5mm for Ø3.5 fixture with the abutment tightened
- Recommended tightening torque : 30Ncm
- Packing unit : Abutment + Protect cap

Abutment + Protect cap order code
: product code + **P** (ex : KSRA5620**P**)

KS products are marked with "K".

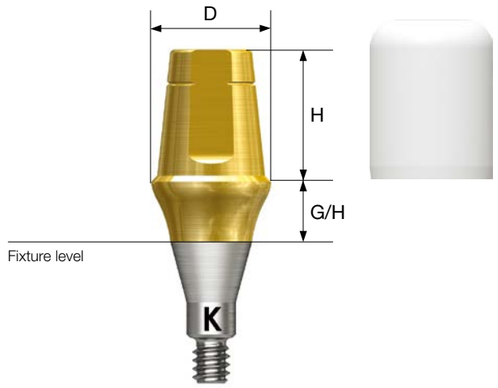

D Ø4.0

H \ G/H	1.0	2.0	3.0	4.0	5.0
4.0	KSRA**4410**	KSRA**4420**	KSRA**4430**	KSRA**4440**	KSRA**4450**
5.5	KSRA**4610**	KSRA**4620**	KSRA**4630**	KSRA**4640**	KSRA**4650**
7.0	KSRA**4710**	KSRA**4720**	KSRA**4730**	KSRA**4740**	KSRA**4750**

D Ø4.5

H \ G/H	1.0	2.0	3.0	4.0	5.0
4.0	KSRA**4411**	KSRA**4421**	KSRA**4431**	KSRA**4441**	KSRA**4451**
5.5	KSRA**4611**	KSRA**4621**	KSRA**4631**	KSRA**4641**	KSRA**4651**
7.0	KSRA**4711**	KSRA**4721**	KSRA**4731**	KSRA**4741**	KSRA**4751**

Rigid Abutment

D ø5.0

H \ G/H	1.0	2.0	3.0	4.0	5.0
4.0	KSRA**5410**	KSRA**5420**	KSRA**5430**	KSRA**5440**	KSRA**5450**
5.5	KSRA**5610**	KSRA**5620**	KSRA**5630**	KSRA**5640**	KSRA**5650**
7.0	KSRA**5710**	KSRA**5720**	KSRA**5730**	KSRA**5740**	KSRA**5750**

D ø6.0

H \ G/H	1.0	2.0	3.0	4.0	5.0
4.0	KSRA**6410**	KSRA**6420**	KSRA**6430**	KSRA**6440**	KSRA**6450**
5.5	KSRA**6610**	KSRA**6620**	KSRA**6630**	KSRA**6640**	KSRA**6650**
7.0	KSRA**6710**	KSRA**6720**	KSRA**6730**	KSRA**6740**	KSRA**6750**

D ø7.0

H \ G/H	1.0	2.0	3.0	4.0	5.0
5.5	KSRA**7610**	KSRA**7620**	KSRA**7630**	KSRA**7640**	KSRA**7650**

Transfer Abutment

- Abutment for producing cement-retained/combination prosthesis
- Fixture level impression
- Abutment level impression possible by rigid impression coping (except Ø4.0)
- Tightened with 1.2 hex driver
- G/H height raised by 0.5mm for Ø3.5 fixture with the abutment tightened
- Recommended tightening torque : 30Ncm
- Packing unit : Abutment + Ti screw

Abutment + TI screw order code
: product code + **TH** (ex : KSTA4621**TH**)

KS products have a cylinder and a slot at the bottom.

KS non-hex products have a slot at the bottom.

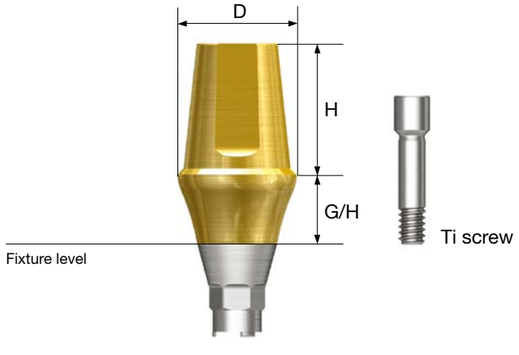

D ø4.0

	H \ G/H	1.0	2.0	3.0	4.0	5.0
Hex	5.5	KSTA4612	KSTA4622	KSTA4632	KSTA4642	KSTA4652
	7.0	KSTA4712	KSTA4722	KSTA4732	KSTA4742	KSTA4752
Non-Hex	5.5	KSTA4612N	KSTA4622N	KSTA4632N	KSTA4642N	KSTA4652N
	7.0	KSTA4712N	KSTA4722N	KSTA4732N	KSTA4742N	KSTA4752N

D ø4.5

	H \ G/H	1.0	2.0	3.0	4.0	5.0
Hex	5.5	KSTA4611	KSTA4621	KSTA4631	KSTA4641	KSTA4651
	7.0	KSTA4711	KSTA4721	KSTA4731	KSTA4741	KSTA4751
Non-Hex	5.5	KSTA4611N	KSTA4621N	KSTA4631N	KSTA4641N	KSTA4651N
	7.0	KSTA4711N	KSTA4721N	KSTA4731N	KSTA4741N	KSTA4751N

D ø5.0

	H \ G/H	1.0	2.0	3.0	4.0	5.0
Hex	4.0	KSTA5410	KSTA5420	KSTA5430	KSTA5440	KSTA5450
	5.5	KSTA5610	KSTA5620	KSTA5630	KSTA5640	KSTA5650
	7.0	KSTA5710	KSTA5720	KSTA5730	KSTA5740	KSTA5750
Non-Hex	4.0	KSTA5410N	KSTA5420N	KSTA5430N	KSTA5440N	KSTA5450N
	5.5	KSTA5610N	KSTA5620N	KSTA5630N	KSTA5640N	KSTA5650N
	7.0	KSTA5710N	KSTA5720N	KSTA5730N	KSTA5740N	KSTA5750N

D ø6.0

	H \ G/H	1.0	2.0	3.0	4.0	5.0
Hex	4.0	KSTA6410	KSTA6420	KSTA6430	KSTA6440	KSTA6450
	5.5	KSTA6610	KSTA6620	KSTA6630	KSTA6640	KSTA6650
	7.0	KSTA6710	KSTA6720	KSTA6730	KSTA6740	KSTA6750
Non-Hex	4.0	KSTA6410N	KSTA6420N	KSTA6430N	KSTA6440N	KSTA6450N
	5.5	KSTA6610N	KSTA6620N	KSTA6630N	KSTA6640N	KSTA6650N
	7.0	KSTA6710N	KSTA6720N	KSTA6730N	KSTA6740N	KSTA6750N

D ø7.0

	H \ G/H	1.0	2.0	3.0	4.0	5.0
Hex	4.0	KSTA7410	KSTA7420	KSTA7430	KSTA7440	KSTA7450
	5.5	KSTA7610	KSTA7620	KSTA7630	KSTA7640	KSTA7650
Non-Hex	4.0	KSTA7410N	KSTA7420N	KSTA7430N	KSTA7440N	KSTA7450N
	5.5	KSTA7610N	KSTA7620N	KSTA7630N	KSTA7640N	KSTA7650N

Transfer Abutment Components

Bite Impression Coping

- Components for fixture level impression taking
- Bite taking as well as impression taking
- Same basic usage as transfer impression coping
- Hand tightened with bite impression coping driver
- Hex screw type tightened with 1.2 hex driver and friction screw type tightened with bite impression coping driver
- G/H height raised by 0.5mm for Ø3.5 fixture with the abutment tightened

KS products have a cylinder and a slot at the bottom.

Hex screw type

Friction screw type

D	H	G/H 2.0	3.0	4.0	5.0
					
Ø 4.0	3.5	KSBIC4420H	KSBIC4430H	KSBIC4440H	KSBIC4450H
	5.5	KSBIC4620H	KSBIC4630H	KSBIC4640H	KSBIC4650H
Ø 4.5	3.5	KSBIC4421H	KSBIC4431H	KSBIC4441H	KSBIC4451H
	5.5	KSBIC4621H	KSBIC4631H	KSBIC4641H	KSBIC4651H
Ø 5.0	3.5	KSBIC5420H	KSBIC5430H	KSBIC5440H	KSBIC5450H
	5.5	KSBIC5620H	KSBIC5630H	KSBIC5640H	KSBIC5650H

D	H	G/H 2.0	3.0	4.0	5.0
					
Ø 4.0	5.0	KSBIC4420	KSBIC4430	KSBIC4440	KSBIC4450
	7.0	KSBIC4620	KSBIC4630	KSBIC4640	KSBIC4650
Ø 4.5	5.0	KSBIC4421	KSBIC4431	KSBIC4441	KSBIC4451
	7.0	KSBIC4621	KSBIC4631	KSBIC4641	KSBIC4651
Ø 5.0	5.0	KSBIC5420	KSBIC5430	KSBIC5440	KSBIC5450
	7.0	KSBIC5620	KSBIC5630	KSBIC5640	KSBIC5650

Bite Impression Coping Driver

Hex Screw Type

- Used for tightening and loosening of bite impression coping
- Dedicated driver for hex screw type

OICDMH

Friction Screw Type

- Used for tightening and loosening of bite impression coping
- Dedicated driver for friction screw type

OICDM

Bite Index

- G/H height raised by 0.5mm for Ø3.5 fixture with the abutment tightened
- Assembled to the fixture for check bite impression
- Hand tightened with 1.2 hex driver
- Packing unit : 2ea

D	L 4.0	6.0	8.0	10.0	12.0
					
Ø 4.5	KSBI4504S	KSBI4506S	KSBI4508S	KSBI4510S	KSBI4512S
Ø 5.5	KSBI5504S	KSBI5506S	KSBI5508S	KSBI5510S	KSBI5512S

Transfer Abutment Components

Pick-up Impression Coping

- Components for fixture level impression taking
- Using open tray
- Unique design that is stably fixed within the impression body
- Hand tightened with 1.2 hex driver
- G/H height raised by 0.5mm for Ø3.5 fixture with the abutment tightened
- Packing unit : Impression coping body + Guide pin(*)

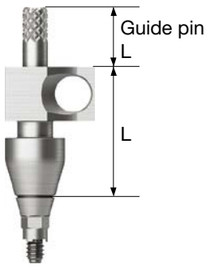

KS products have a cylinder and a slot at the bottom.

KS non-hex products have a slot at the bottom.

D \ L	11	
Type	Hex	Non-Hex
Ø 4.0	KSPI4011	KSPI4011N
Ø 4.5	KSPI4511	KSPI4511N
Ø 5.0	KSPI5011	KSPI5011N
Ø 6.0	KSPI6011	KSPI6011N
Ø 7.0	KSPI7011	KSPI7011N

Guide Pin	0	5.0	10	15
	KSPGP100	KSPGP150*	KSPGP200	KSPGP250

D \ L	16	
Type	Hex	Non-Hex
Ø 4.0	KSPI4016	GSPI4016N
Ø 4.5	KSPI4516	GSPI4516N
Ø 5.0	KSPI5016	GSPI5016N
Ø 6.0	KSPI6016	GSPI6016N
Ø 7.0	KSPI7016	GSPI7016N

Guide Pin	0	5.0	10
	KSPGP150	KSPGP200*	KSPGP250

Transfer Impression Coping

- Components for fixture level impression taking
- Using closed tray
- Triangular arc structure for stable fastening and accurate repositioning
- Hand tightened with 1.2 hex driver
- G/H height raised by 0.5mm for Ø3.5 fixture with the abutment tightened
- Packing unit
  - Hex : Impression coping body + Guide pin
  - Non-hex : Impression coping

KS products have a cylinder and a slot at the bottom.

D \ L	11		14	
Type	Hex	Non-Hex	Hex	Non-Hex
Ø 4.0	KSTI4011	KSTI4011N	KSTI4014	KSTI4014N
Ø 4.5	KSTI4511	KSTI4511N	KSTI4514	KSTI4514N
Ø 5.0	KSTI5011	KSTI5011N	KSTI5014	KSTI5014N
Ø 6.0	KSTI6011	KSTI6011N	KSTI6014	KSTI6014N
Ø 7.0	KSTI7011	KSTI7011N	KSTI7014	KSTI7014N

Transfer Abutment Components

Fixture Lab Analog

- Lab analog for fixture level impression
- Two types, each used for fixtures with a diameter of Ø3.5/4.0 or greater

For
Ø3.5

KSTLA**350**

KSTLA**400**

Laboratory Screw

- Lab screw: abutment screw for pore work
- Waxing screw : used for producing screw type abutment and transfer jig, by extending screw hole to the upper part

Lab Screw

KSAB**SL**

Waxing Screw

KSAB**SW**

PROSTHETIC FLOW DIAGRAM 2

Transfer / Angled / FreeForm ST / GoldCast / NP-Cast

Fixture Level Impression

Angled Abutment

- Abutment for producing cement-retained/ combination prosthesis
- Fixture insertion angle compensated up to 23° without removal
- Fixture level impression
- Tightened with 1.2 hex driver
- G/H height raised by 0.5mm for Ø3.5 fixture with the abutment tightened
- Recommended tightening torque : 30Ncm
- Packing unit : Abutment + Ti screw

Abutment + Ti screw order code
: product code + **TH** (ex : KSAA5020A**TH**)

KS products have a cylinder and a slot at the bottom.

KS non-hex products have a slot at the bottom.

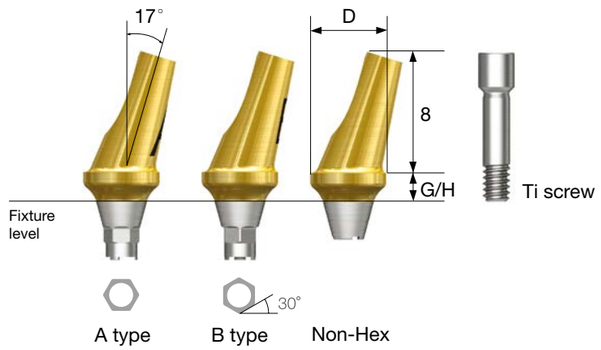

D ø4.0

G/H	2.0			4.0		
Type	Hex A	Hex B	Non-Hex	Hex A	Hex B	Non-Hex
	KSAA**4020A**	KSAA**4020B**	KSAA**4020N**	KSAA**4040A**	KSAA**4040B**	KSAA**4040N**

D ø4.5

G/H	2.0			4.0		
Type	Hex A	Hex B	Non-Hex	Hex A	Hex B	Non-Hex
	KSAA**4520A**	KSAA**4520B**	KSAA**4520N**	KSAA**4540A**	KSAA**4540B**	KSAA**4540N**

Angled Abutment

D ø5.0

G/H	2.0			4.0		
Type	Hex A	Hex B	Non-Hex	Hex A	Hex B	Non-Hex
						
	KSAA**5020A**	KSAA**5020B**	KSAA**5020N**	KSAA**5040A**	KSAA**5040B**	KSAA**5040N**

D ø6.0

G/H	2.0			4.0		
Type	Hex A	Hex B	Non-Hex	Hex A	Hex B	Non-Hex
						
	KSAA**6020A**	KSAA**6020B**	KSAA**6020N**	KSAA**6040A**	KSAA**6040B**	KSAA**6040N**

FreeForm ST Abutment

- Abutment for producing cement-retained/ combination prosthesis
- Used for adjusting the margin shape of abutment
- Fixture level impression
- Tightened with 1.2 hex driver
- G/H height raised by 0.5mm for Ø3.5 fixture with the abutment tightened
- Recommended tightening torque : 30Ncm
- Packing unit : Abutment + Ti screw

Abutment + Ti screw order code
: product code + **TH** (ex : KSFA5015**TH**)

KS products have a cylinder and a slot at the bottom.

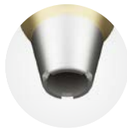

KS non-hex products have a slot at the bottom.

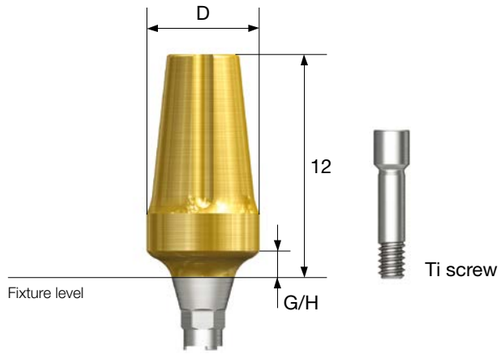

D ø4.0

G/H	1.5		3.0	
Type	Hex	Non-Hex	Hex	Non-Hex
				
	KSFA**4015**	KSFA**4015N**	KSFA**4030**	KSFA**4030N**

D ø5.0 (Straight)

G/H	1.5		3.0	
Type	Hex	Non-Hex	Hex	Non-Hex
				
	KSFA**S5015**	KSFA**S5015N**	KSFA**S5030**	KSFA**S5030N**

FreeForm ST Abutment

D ø5.0

G/H	1.5		3.0	
Type	Hex	Non-Hex	Hex	Non-Hex
				
	KSFA**5015**	KSFA**5015N**	KSFA**5030**	KSFA**5030N**

D ø6.0

G/H	1.5		3.0	
Type	Hex	Non-Hex	Hex	Non-Hex
				
	KSFA**6015**	KSFA**6015N**	KSFA**6030**	KSFA**6030N**

D ø7.0

G/H	1.5		3.0	
Type	Hex	Non-Hex	Hex	Non-Hex
				
	KSFA**7015**	KSFA**7015N**	KSFA**7030**	KSFA**7030N**

GoldCast Abutment

- Abutment for producing cement-retained/combination/ screw-retained prosthesis
- Used to produce customized prosthesis by casting with gold alloy
- Abutment melting temperature : 1,400~1,450°C
- Fixture level impression
- Tightened with 1.2 hex driver
- G/H height raised by 0.5mm for Ø3.5 fixture with the abutment tightened
- Recommended tightening torque : 30Ncm
- Packing unit : Abutment + Ti screw

Abutment + Ti screw order code
: product code + **TH** (ex : KSGA4510S**TH**)

KS products have a cylinder at the bottom.

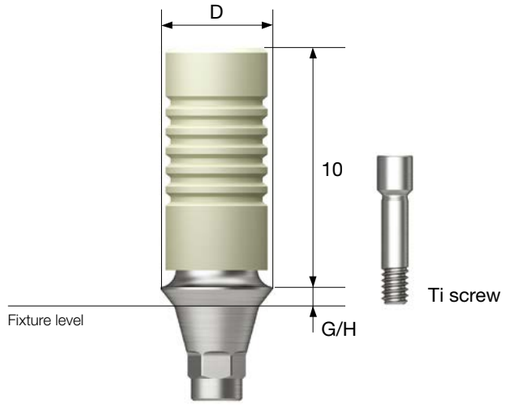

D ø4.0

G/H	1.0		3.0	
Type	Hex	Non-Hex	Hex	Non-Hex
				
	KSGA**4010**	KSGA**4010N**	KSGA**4030**	KSGA**4030N**

D ø4.5

G/H	1.0		3.0	
Type	Hex	Non-Hex	Hex	Non-Hex
				
	KSGA**4510**	KSGA**4510N**	KSGA**4530**	KSGA**4530N**

NP-Cast Abutment

- Abutment for producing cement-retained/combination/ screw-retained prosthesis
- Used to produce customized prosthesis by casting with nonprecious metal alloy
- Abutment melting temperature : 1,400~1,550°C
- Fixture level impression
- Tightened with 1.2 hex driver
- G/H height raised by 0.5mm for Ø3.5 fixture with the abutment tightened
- Recommended tightening torque : 30Ncm
- Packing unit : Abutment + TI screw

Abutment + Ti screw order code
: product code + **TH** (ex : KSNA4510S**TH**)

KS products have a cylinder at the bottom.

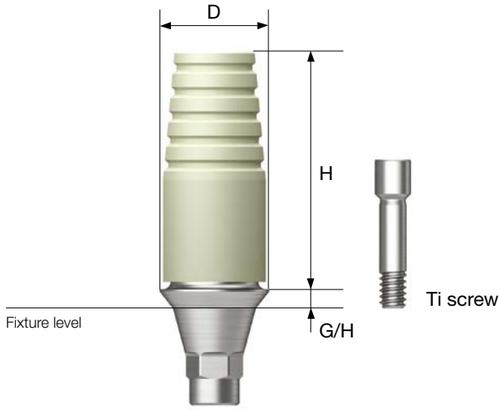

D ø4.0

G/H	1.0		3.0	
Type	Hex	Non-Hex	Hex	Non-Hex
				
	KSNA**4010**	KSNA**4010N**	KSNA**4030**	KSNA**4030N**

D ø4.5

G/H	1.0		3.0	
Type	Hex	Non-Hex	Hex	Non-Hex
				
	KSNA**4510**	KSNA**4510N**	KSNA**4530**	KSNA**4530N**

Pre-Milled Abutment

- Milling equipment for dental work to product custom abutment
- Easy identification of non-genuine products with the osstem authentication mark
- Excellent tightening precision compared to non-genuine products
- Dedicated line-up to various milling equipment (Milling manufacturers : Doowon, Vatech, Neo, Zirkonzahn, and Manix)
- Recommended tightening torque : 30Ncm
- Packing unit : Abutment + Ti screw

Abutment + screw order code
: product code + **TH** (ex : KSPM10AR**TH**)

KS products have a cylinder and a slot at the bottom.

KS non-hex products have a slot at the bottom.

Equipment	D	Specifications	Code
Doowon ARUM Vatech imes-icore	Ø10	Hex	KSPM10**AR**
		Non-Hex	KSPM10**ARN**
Neo Cameleon	Ø10	Hex	KSPM10**CA**
		Non-Hex	KSPM10**CAN**
Zirkonzahn	Ø10	Hex	KSPM10**ZK**
		Non-Hex	KSPM10**ZKN**
Manix	Ø10	Hex	KSPM10**MX**
		Non-Hex	KSPM10**MXN**

Scan Body

- For intraoral scan: short (10mm)
- For model scan: long (15mm)
- Tightened with 1.2 hex driver
- Packing unit : Scan body + Ti screw

Scan body + screw order code
: product code + **TH** (ex : KSSBOS**TH**)

KS products have a cylinder and a slot at the bottom.

L	10mm	15mm
	 KSSBOS	 KSSBS

Link Abutment for Public

- Abutment for producing cement-retained/combination/ screw-retained prosthesis
- Used for producing Ti + Zr custom abutment with CAD/CAM equipment
- Osstem's official implant library provided
- Fixture level impression
- Tightened with 1.2 hex driver
- Recommended tightening torque : 30Ncm
- Packing unit : Abutment + Ti screw

Abutment + screw order code
: product code + **TH** (ex : KSPL4041**TH**)

KS products have a cylinder and a slot at the bottom.

KS non-hex products have a slot at the bottom.

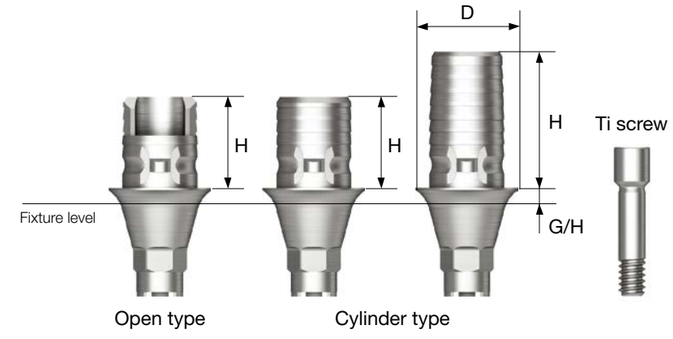

D ø4.0

	H \ G/H Type	1.0	2.0	3.0	4.0
					
Hex	**4.0** Open Type	KSPL**4041**	KSPL**4042**	KSPL**4043**	KSPL**4044**
	4.0 Cylinder Type	KSPL**4041C**	KSPL**4042C**	KSPL**4043C**	KSPL**4044C**
	6.0 Cylinder Type	KSPL**4061**	KSPL**4062**	KSPL**4063**	KSPL**4064**
Non-Hex	**4.0** Open Type	KSPL**4041N**	KSPL**4042N**	KSPL**4043N**	KSPL**4044N**
	4.0 Cylinder Type	KSPL**4041CN**	KSPL**4042CN**	KSPL**4043CN**	KSPL**4044CN**
	6.0 Cylinder Type	KSPL**4061N**	KSPL**4062N**	KSPL**4063N**	KSPL**4064N**

D ø4.5

	H \ G/H Type	1.0	2.0	3.0	4.0
					
Hex	**4.0** Open Type	KSPL**4541**	KSPL**4542**	KSPL**4543**	KSPL**4544**
	4.0 Cylinder Type	KSPL**4541C**	KSPL**4542C**	KSPL**4543C**	KSPL**4544C**
	6.0 Cylinder Type	KSPL**4561**	KSPL**4562**	KSPL**4563**	KSPL**4564**
Non-Hex	**4.0** Open Type	KSPL**4541N**	KSPL**4542N**	KSPL**4543N**	KSPL**4544N**
	4.0 Cylinder Type	KSPL**4541CN**	KSPL**4542CN**	KSPL**4543CN**	KSPL**4544CN**
	6.0 Cylinder Type	KSPL**4561N**	KSPL**4562N**	KSPL**4563N**	KSPL**4564N**

Link Abutment for Cerec

- Abutment for producing cement-retained/combination/ screw-retained prosthesis
- Used for producing Ti + Zr custom abutment with Cerec CAD/CAM equipment
- Tightened with 1.2 hex driver
- Recommended tightening torque : 30Ncm
- Packing unit : Abutment + Ti screw + Scan body

Abutment + screw + scan body order code
: product code + **TH** (ex : KSCTB**TH**)

KS products have a cylinder and a slot at the bottom.

KS non-hex products have a slot at the bottom.

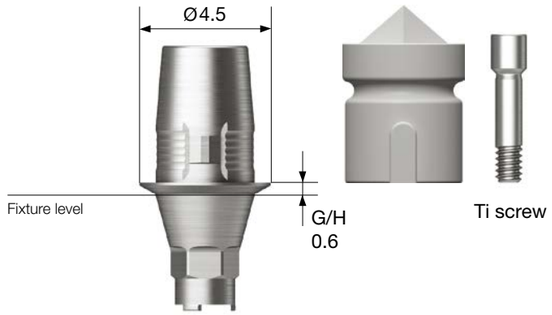

Type	Hex	Non-Hex
	 KSC**TB**	 KSC**TBN**

Scan Post

- Used for the scan body of cerec link abutment with little vertical exposure
  (If the fixture deeply inserted or the soft tissue is thick)
- Scanning by connecting the dedicated scan body for cerec link abutment
- Tightened with 1.2 hex driver
- Packing unit : Scan post + Ti screw

Scan post + screw order code
: product code + **TH** (ex : KSCSP**TH**)

KSCSP

Ti screw

Temporary Abutment

- Abutment for producing cement-retained/ screw-retained prosthesis
- Removed and used for producing temporary prosthesis (Ti Gr-3)
- Fixture level impression
- Tightened with 1.2 hex driver
- G/H height raised by 0.5mm for Ø3.5 fixture with the abutment tightened
- Recommended tightening torque : 20Ncm
- Packing unit : Abutment + Ti screw

Abutment + Ti screw order code
: product code + **TH** (ex : KSTTA4510**TH**)

KS products have a cylinder and a slot at the bottom.

KS non-hex products have a slot at the bottom.

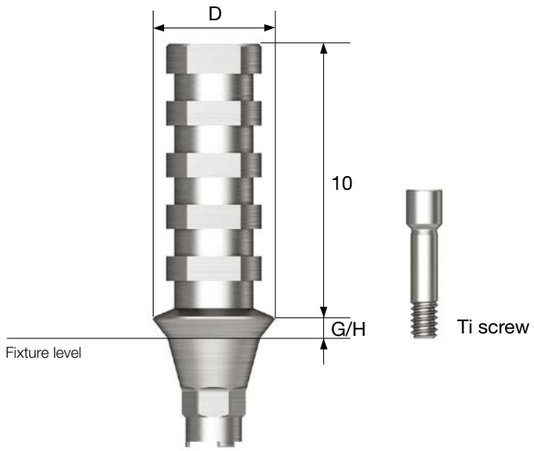

D ø4.0

G/H	1.0		3.0	
Type	Hex	Non-Hex	Hex	Non-Hex
				
	KSTTA**4010**	KSTTA**4010N**	KSTTA**4030**	KSTTA**4030N**

D ø4.5

G/H	1.0		3.0	
Type	Hex	Non-Hex	Hex	Non-Hex
				
	KSTTA**4510**	KSTTA**4510N**	KSTTA**4530**	KSTTA**4530N**

PROSTHETIC FLOW DIAGRAM 3

Multi / Multi Angled

Abutment Level Impression

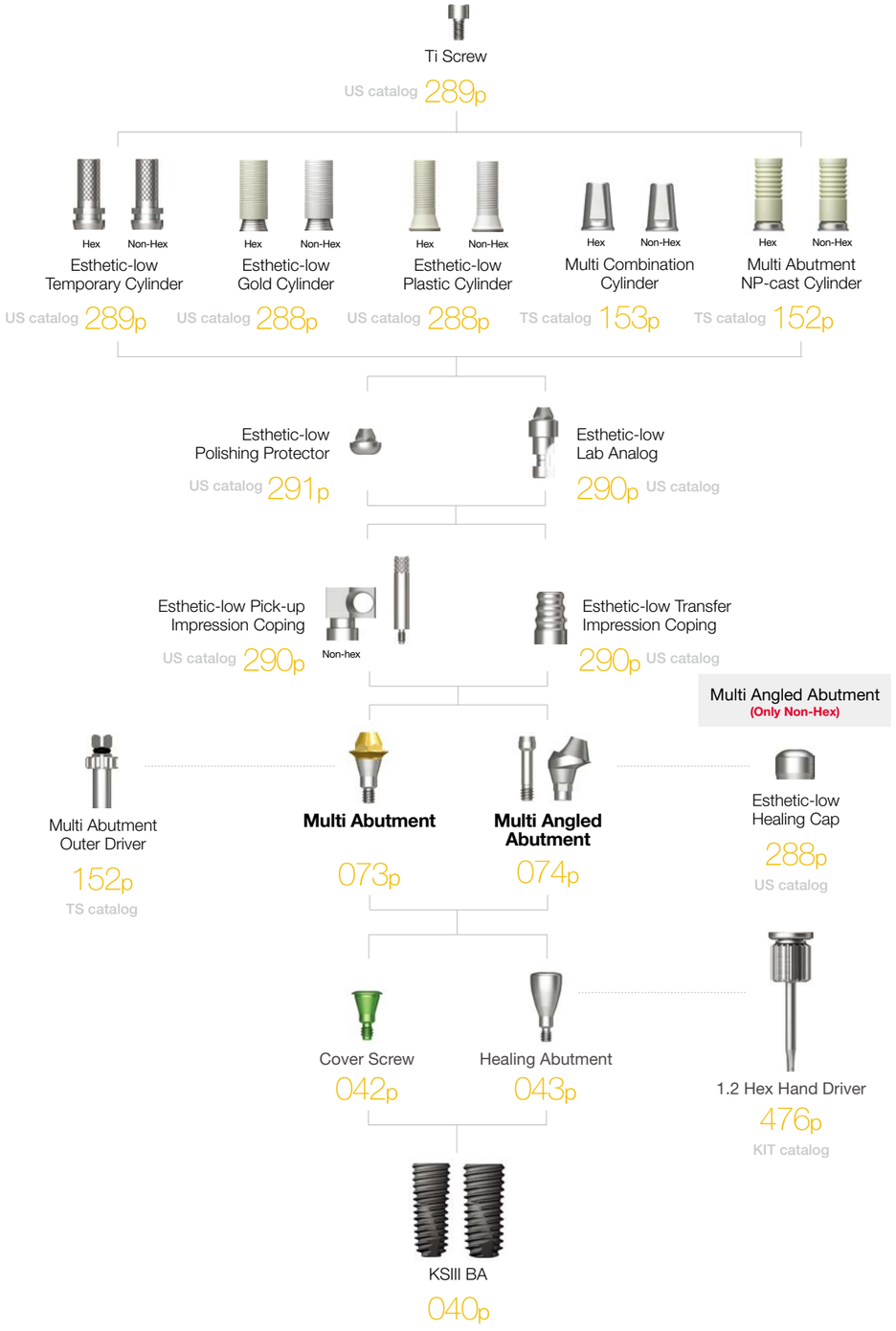

Multi Abutment

- Used for producing screw-retained prosthesis in multiple case
- Same platform as multi angled abutment
- Producing prosthesis with US esthetic low cylinder (Regular/Non-Hex)
- Tightened with dedicated outer driver (code : MAOD)
- G/H height raised by 0.5mm for Ø3.5 fixture with the abutment tightened
- Recommended tightening torque : 30Ncm
- Packing unit : Abutment + carrier

Abutment + carrier order code
: product code + **P** (ex : KSMA5030**P**)

KS products are marked with "K".

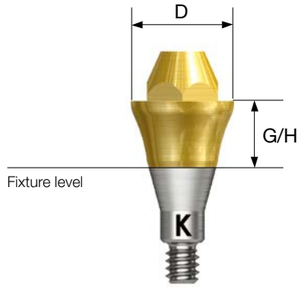

D ø3.5

G/H	1.0	2.0	3.0	4.0	5.0
	KSMA**5010**	KSMA**5020**	KSMA**5030**	KSMA**5040**	KSMA**5050**

Multi Angled Abutment

- Used for producing screw-retained prosthesis in multiple case
- Same platform as multi abutment
- Fixture insertion angle compensated up to 108°
- Producing prosthesis with US esthetic low cylinder (Regular/Non-Hex)
- Using dedicated abutment screw
- Tightened with 1.2 hex driver
- G/H height raised by 0.5mm for Ø3.5 fixture with the abutment tightened
- Recommended tightening torque : 30Ncm
- Packing unit : Abutment + Ti screw

Abutment + Ti screw + carrier order code
: product code + **TH** (ex : KS17MAS4840**TH**)

KS products have a cylinder at the bottom.

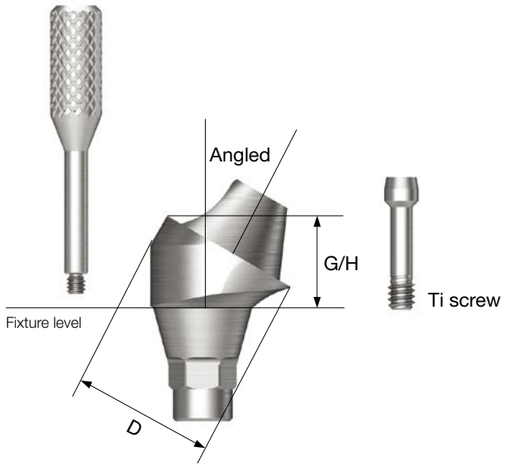

Stud Abutment

- Abutment for overdenture with O-ring attachment
- Insertion angle compensated up to 20°
- Tightened with dedicated outer driver (Small size : STAOD / Normal size : AORD)
- G/H height raised by 0.5mm for Ø3.5 fixture with the abutment tightened
- Recommended tightening torque : 30Ncm
- Ball head diameter

- Small size : Ø1.7 (H 2.5mm)
- Normal size : Ø2.25 (H 3.4mm)

KS products are marked with "K".

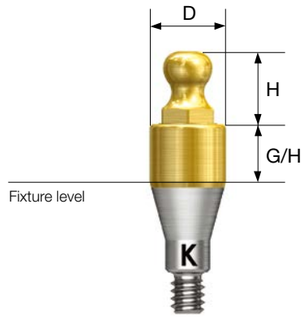

D ø4.8

Angle \ G/H	2.5	3.0	4.0
17°	KS17MA**4820**	KS17MA**4830**	KS17MA**4840**

Angle \ G/H	3.5	4.0	5.0
30°	KS30MA**4830**	KS30MA**4840**	KS30MA**4850**

D ø3.5

	G/H	1.0	2.0	3.0	4.0	5.0	6.0
Small Size		KSST**3510**	KSST**3520**	KSST**3530**	KSST**3540**	KSST**3550**	KSST**3560**
Normal Size		KSSA**3510**	KSSA**3520**	KSSA**3530**	KSSA**3540**	KSSA**3550**	KSSA**3560**

Port Angled Abutment

- Used to compensate the placement angle for overdenture
- Abutment level impression
- Insertion angle compensated up to 60°
- Tightened with 1.2 hex driver
- G/H height raised by 0.5mm for Ø3.5 fixture with the abutment tightened
- Recommended tightening torque : 30Ncm
- Packing unit : Abutment + Ti screw

Abutment + Ti screw order code
: product code + **TH** (ex : KS30PA455R**TH**)

KS products have a cylinder at the bottom.

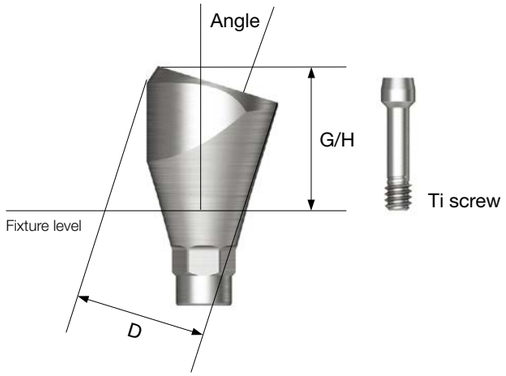

D ø4.6

Angle \ G/H	4.0	5.0
10°	 KS10PA**454**	 KS10PA**455**

Angle \ G/H	4.0	5.0
17°	 KS17PA**454**	 KS17PA**455**

Angle \ G/H	4.0	5.0
30°	 KS30PA**454**	 KS30PA**455**

KS SYSTEM